MOLEX INCORPORATED
LISLE, ILL. 60532 U.S.A.

PRODUCT SPECIFICATION
.050 PITCH SIMM SOCKET FAMILY

1.0 SCOPE

THIS SPECIFICATION COVERS THE FOLLOWING ENGINEERING PART NUMBERS:

1.1 PHOSPHOR BRONZE/TIN OR GOLD PLATED ASSEMBLIES

A-78962-**** (SINGLE ROW VERTICAL)
A-78964-**** (SINGLE ROW LOW PROFILE)
A-78976-**** (SINGLE ROW 40 DEGREE)

PRODUCT SPECIFICATION
.050 PITCH SIMM SOCKET FAMILY

FOR USE WITH A .050 PITCH LEADLESS MODULE AS SHOWN ON SHEETS 8-10.

2.0 PRODUCT DESCRIPTION

THE .050 PITCH SIMM SOCKET EDGE CONNECTOR FAMILY PROVIDES A HIGH DENSITY, COST EFFECTIVE METHOD FOR INTERCHANGING MULTIPLE CHIP ARRAY MODULES. THE SOCKET USES A MODIFIED TUNING FORK TERMINAL FOR ZERO OR LOW INSERTION FORCE. THE DESIGN INCORPORATES FEATURES FOR POLARIZATION TO P.C. BOARD AND POLARIZATION TO MODULE. IT ALSO FEATURES MODULE ALIGNMENT PEGS AND LOCKING LATCHES TO INCREASE THE UNITS RESISTANCE TO VIBRATION AND SHOCK. IN ADDITION, A CENTER BIASING FEATURE IS INCLUDED TO INSURE PROPER HORIZONTAL ALIGNMENT BETWEEN THE TERMINALS AND MODULE PADS.

THIS DRAWING CONTAINS INFORMATION THAT IS PROPIETARY TO MOLEX INC. AND SHOULD NOT BE USED WITHOUT WRITTEN PERMISSION.
DRWG. NO. PS-78954

PRODUCT SPECIFICATION
.050 PITCH SIMM SOCKET FAMILY

3.0 MECHANICAL SPECIFICATIONS

3.1 MATERIALS:

HOUSING- GLASS FILLED LIQUID CRYSTAL POLYMER,
COLOR: BLACK
U.L. FLAMMABILITY: 94V-0

TERMINAL- PHOSPHOR BRONZE ALLOY 510

PLATING- POST PLATE
200 μin/(5.08 μm) MIN. TIN-LEAD IN CONTACT AREA AND 150 μin/(3.81μm) MIN. TIN-LEAD IN TAIL AREA OVER 50 μin/(1.27 μm) MIN. NICKEL OVERALL.
OR 30 μin/(0.76 μm) MIN. GOLD IN CONTACT AREA AND 150 μin/(3.81μm) MIN. TIN-LEAD IN TAIL AERA OVER 75 μin/(1.91μm) MIN. NICKEL OVERALL.

METAL LATCH- 301 STAINLESS STEEL

3.2 OVERALL DIMENSIONS:

REFER TO SALES DRAWINGS

3.3 CONTACT NORMAL FORCE:

MINIMUM 150 GRAMS AVERAGE INITIALLY.
THIS METHOD OF MEASUREMENT INCLUDES IN ITS READING THE EFFECTS OF THE LATCHES.

3.4 TERMINAL RETENTION IN HOUSING:

2 POUNDS MINIMUM PER CIRCUIT

THIS DRAWING CONTAINS INFORMATION THAT IS PROPIETARY TO MOLEX INC. AND SHOULD NOT BE USED WITHOUT WRITTEN PERMISSION.

3.5 MATING CYCLES:

25 CYCLES MAX.

3.6 TEMPERATURE RATING:

-40°C TO +85°C OPERATING AND STORAGE

4.0 ELECTRICAL SPECIFICATIONS

4.1 CONTACT RESISTANCE:
30 MILLIOHMS MAX. INITIALLY
50 MILLIOHMS MAX. AFTER LIFE (PER PARAGRAPH 5.0)

4.2 INSULATION RESISTANCE:
5000 MEGOHM @ 500 VAC INITIALLY

4.3 DIELECTRIC STRENGTH:
1000 VAC

4.4 RATED VOLTAGE:
250 VOLTS

4.5 RATED CURRENT:
1 amp

4.6 CAPACITANCE BETWEEN TERMINALS:
2.5 PF MAX.

THIS DRAWING CONTAINS INFORMATION THAT IS PROPIETARY TO MOLEX INC. AND SHOULD NOT BE USED WITHOUT WRITTEN PERMISSION.

PRODUCT SPECIFICATION
.050 PITCH SIMM SOCKET FAMILY

5.0 ENVIRONMENTAL SPECIFICATIONS

5.1 THERMAL AGING:
85° C FOR 160 HOURS

5.2 CYCLIC HUMIDITY:
10 DAYS (10 CYCLES) PER
MIL-STD-202F, METHOD 106E
(TEMPERATURE EXTREMES: 25° C TO 65° C)

5.3 THERMAL SHOCK:
MIL-STD-202F, METHOD 107E
(5 CYCLES, -40°C TO 85°C
½ HOUR DWELL AT EACH EXTREME)

5.4 VIBRATION:
MIL-STD-202F, METHOD 201A
(10 TO 55 Hz FREQUENCY TRAVERSED IN
APPROXIMATELY 1 MIN.; 2 HOURS PER AXIS)

5.5 RESISTANCE TO SOLDERING HEAT THROUGH
INFRARED REFLOW CONDITIONS

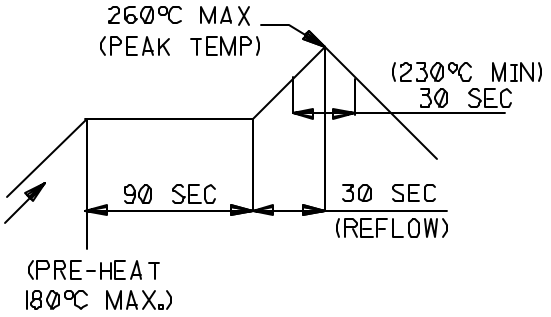

TEMPERATURE CONDITION GRAPH
(TEMPERATURE ON BOARD PATTERN SIDE)

NOTE: ALL TESTING PERFORMED IN SERIES AFTER SAMPLES ARE MATED 1, 5 AND 25 TIMES WITH TEST BOARD.

THIS DRAWING CONTAINS INFORMATION THAT IS PROPRIETARY TO MOLEX INC. AND SHOULD NOT BE USED WITHOUT WRITTEN PERMISSION.
DRAWING NO. PS-78954

PRODUCT SPECIFICATION
.050 PITCH SIMM SOCKET FAMILY

NOTE: VALUES MAY VARY DUE TO TEST SEQUENCE AND LEADLESS SIP MODULE PLATING. CUSTOMER SHOULD TEST TO THEIR PARTICULAR APPLICATION AND PERFORMANCE NEEDS.

THIS DRAWING CONTAINS INFORMATION THAT IS PROPRIETARY TO MOLEX INC. AND SHOULD NOT BE USED WITHOUT WRITTEN PERMISSION.

PRODUCT SPECIFICATION
.050 PITCH SIMM SOCKET FAMILY

SINGLE SIDED LEADLESS SIP MODULE CONFIGURATION REQUIREMENTS:

1) COPPER CONTACT PADS ARE TO OVERPLATED WITH (.00127)/.000050 MIN. NICKEL FOLLOWED WITH (.0051)/.000200 MIN. TIN/LEAD REFLOW (FOR TIN/LEAD PLATED CONTACT SYSTEMS) OR, (.00076)/.000030 MIN. GOLD OVER (.00191)/.000075 MIN. NICKEL (FOR GOLD PLATED CONTACT SYSTEMS).

2) CONTACT PADS ARE REQUIRED ON BOTH COMPONENT AND CIRCUIT SIDES OF MODULE. PAIRED CONTACTS SHOULD BE ELECTRICALLY SHUNTED WITH THROUGH-HOLE VIAS.

3) MAXIMUM ALLOWABLE WARPAGE: (0.25)/.010 BOW.

4) SINGLE ROW SOCKETS MUST BE SPACED ACCORDING TO CHART ON PAGE 11.

SEE SHEET 8 FOR DIAGRAM OF SINGLE SIDED MODULE

THIS DRAWING CONTAINS INFORMATION THAT IS PROPRIETARY TO MOLEX INC. AND SHOULD NOT BE USED WITHOUT WRITTEN PERMISSION.

MOLEX INCORPORATED

LISLE, ILL. 60532 U.S.A.

PRODUCT SPECIFICATION
.050 PITCH SIMM SOCKET FAMILY

SINGLE SIDED LEADLESS SIP MODULE REQUIREMENTS

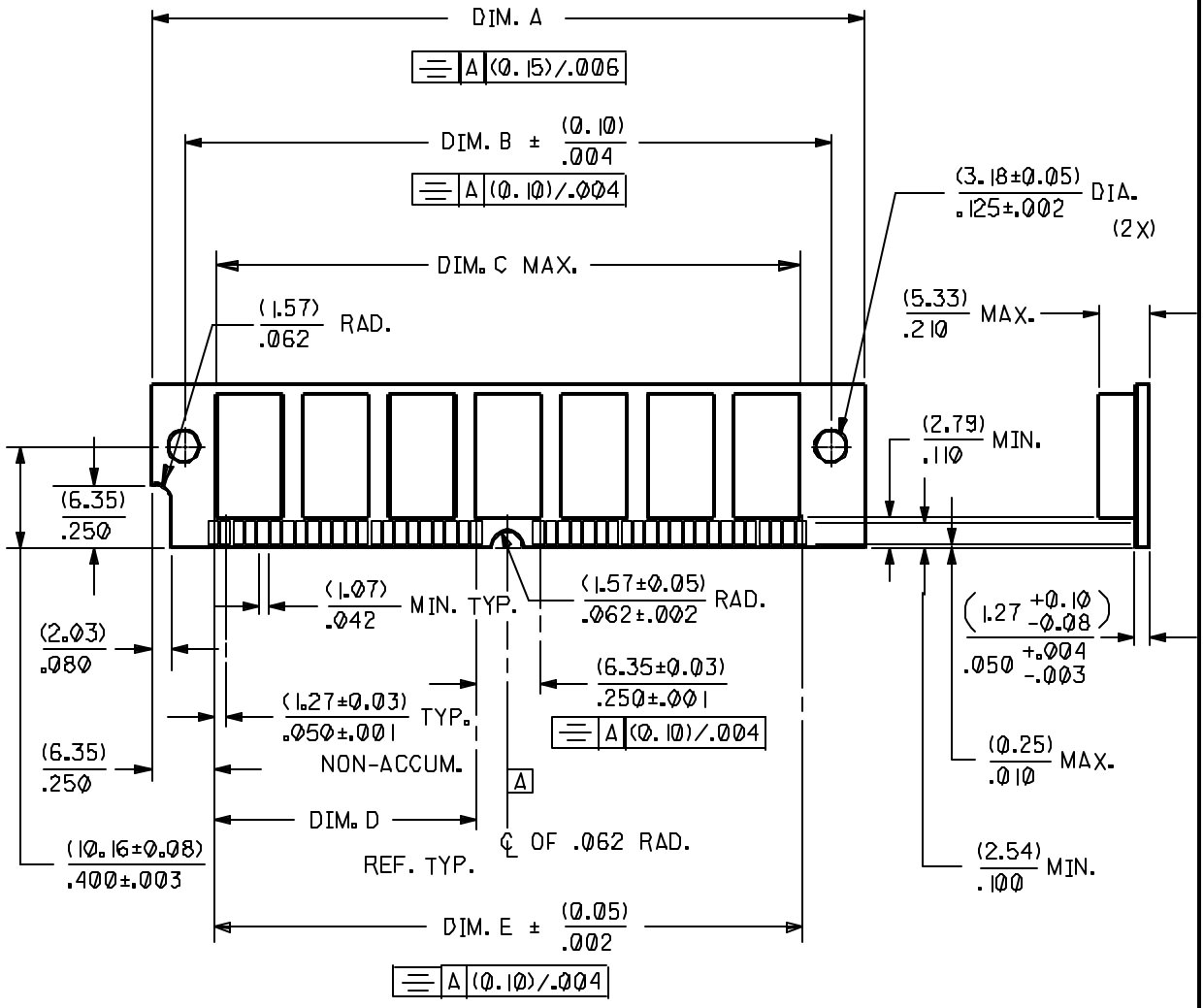

FOR CHARTED DIMENSIONS, SEE SHEET 10.
UNLESS OTHERWISE SPECIFIED, ALL TOLERANCES ±(0.13)/.005.

DRWG. NO. PS-78954

REV.
SHT.

FILE NAME				
PS-78954	C = 0 ▼ = 0	REVISE ONLY ON CAD SYSTEM	REV.	L
	THIS DRAWING CONTAINS INFORMATION THAT IS PROPRIETARY TO MOLEX INC. AND SHOULD NOT BE USED WITHOUT WRITTEN PERMISSION.		SHT.	8

DRWG. NO. PS-78954

MOLEX INCORPORATED

LISLE, ILL. 60532 U.S.A.

PRODUCT SPECIFICATION
.050 PITCH SIMM SOCKET FAMILY

DOUBLE SIDED LEADLESS SIP MODULE REQUIREMENTS
(IN ADDITION TO NOTES 1-3 ON SHEET 7):

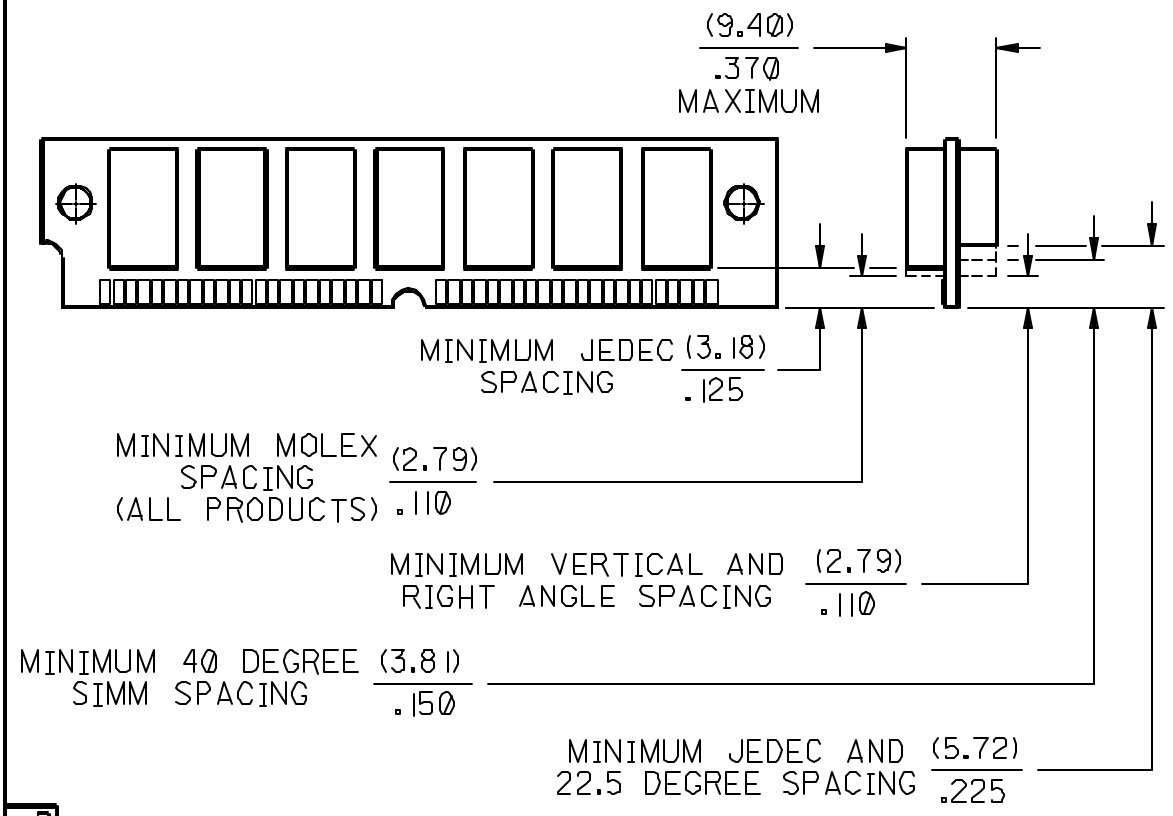

FOR ALL UNSPECIFIED DIMENSIONS SEE SHEET 8.
AND CHART ON SHEET 10.

THIS DRAWING CONTAINS INFORMATION THAT IS PROPRIETARY TO MOLEX INC. AND SHOULD NOT BE USED WITHOUT WRITTEN PERMISSION.

DRWG. NO. PS-78954

MOLEX INCORPORATED

LISLE, ILL. 60532 U.S.A.

PRODUCT SPECIFICATION
.050 PITCH SIMM SOCKET FAMILY

CIRCUIT SIZE	DIM. A	DIM. B	DIM. C MAX.	DIM. D	DIM. E
38	(64.77) / 2.550	(58.01) / 2.284	(56.39) / 2.220	(22.86) / 0.900	(52.07) / 2.050
40	(74.93) / 2.950	(60.55) / 2.384	(58.93) / 2.320	(24.13) / 0.950	(54.61) / 2.150
60	(92.71) / 3.650	(85.95) / 3.384	(83.82) / 3.300	(36.83) / 1.450	(80.01) / 3.150
64	(97.79) / 3.850	(91.03) / 3.584	(88.90) / 3.500	(39.37) / 1.550	(85.09) / 3.350
68	(102.87) / 4.050	(96.11) / 3.784	(93.98) / 3.700	(41.91) / 1.650	(90.17) / 3.550
72	(107.95) / 4.250	(101.19) / 3.984	(99.06) / 3.900	(44.45) / 1.750	(95.25) / 3.750
80	(118.11) / 4.650	(111.35) / 4.384	(109.22) / 4.300	(49.53) / 1.950	(105.41) / 4.150
90	(130.81) / 5.150	(124.05) / 4.884	(121.92) / 4.800	(55.88) / 2.200	(118.11) / 4.650
100	(143.51) / 5.650	(136.75) / 5.384	(134.62) / 5.300	(62.23) / 2.450	(130.81) / 5.150

THIS DRAWING CONTAINS INFORMATION THAT IS PROPIETARY TO MOLEX INC. AND SHOULD NOT BE USED WITHOUT WRITTEN PERMISSION.

MOLEX INCORPORATED

LISLE, ILL. 60532 U.S.A.

PRODUCT SPECIFICATION
.050 PITCH SIMM SOCKET FAMILY

MINIMUM CENTER TO CENTER DISTANCE FOR SEQUENTIALLY REMOVED MODULES PER JEDEC BOARD HEIGHT DIMENSIONS. (.010 IN. BOARD SPACING AFTER INSERTION.)

	22.5°	40°	VERTICAL
DOUBLE SIDED 1.725 BOARD	1.142 IN.	0.701 IN.	.0370 IN.
SINGLE SIDED 1.725 BOARD	0.753 IN.	0.500 IN.	0.350 IN.
DOUBLE SIDED 1.005 BOARD	1.053 IN.	0.642 IN.	0.370 IN.
SINGLE SIDED 1.005 BOARD	0.668 IN.	0.500 IN.	0.350 IN.

THIS DRAWING CONTAINS INFORMATION THAT IS PROPIETARY TO MOLEX INC. AND SHOULD NOT BE USED WITHOUT WRITTEN PERMISSION.

DRWG. NO. PS-78954

MOLEX INCORPORATED

LISLE, ILL. 60532 U.S.A.

PRODUCT SPECIFICATION
.050 PITCH SIMM SOCKET FAMILY

REVISION	DESCRIPTION
H	REVISED PER ECR#U31598 MJS 1-27-94
I	REVISED PER ECN#U50613 GMY 12-21-94
J	REVISED PER ECN#U51017 MJS 4-17-95
K	REVISED PLATING SPECIFICATION PER ECN#U60065 GMY 7-12-95
L	REMOVED DUAL ROW SERIES ECN# UDT2002-0575 DMORGAN 01/10/10

THIS DRAWING CONTAINS INFORMATION THAT IS PROPIETARY TO MOLEX INC. AND SHOULD NOT BE USED WITHOUT WRITTEN PERMISSION.

DRAWING NO. PS-78954