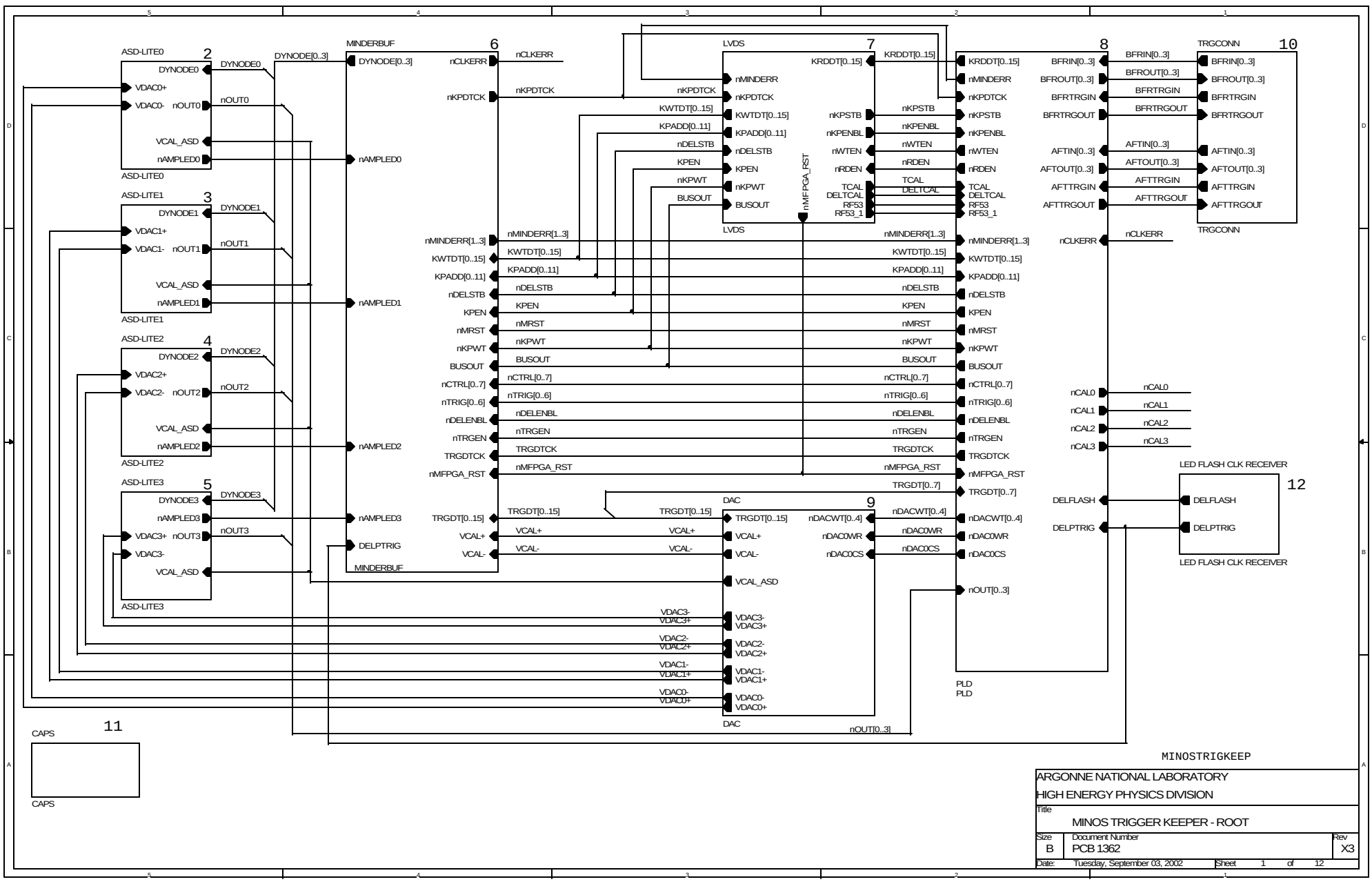

MINOSTRIGKEEP

ARGONNE NATIONAL LABORATORY
HIGH ENERGY PHYSICS DIVISION

Title		
MINOS TRIGGER KEEPER - ROOT		
Size B	Document Number PCB 1362	Rev X3
Date: Tuesday, September 03, 2002	Sheet 1 of 12	

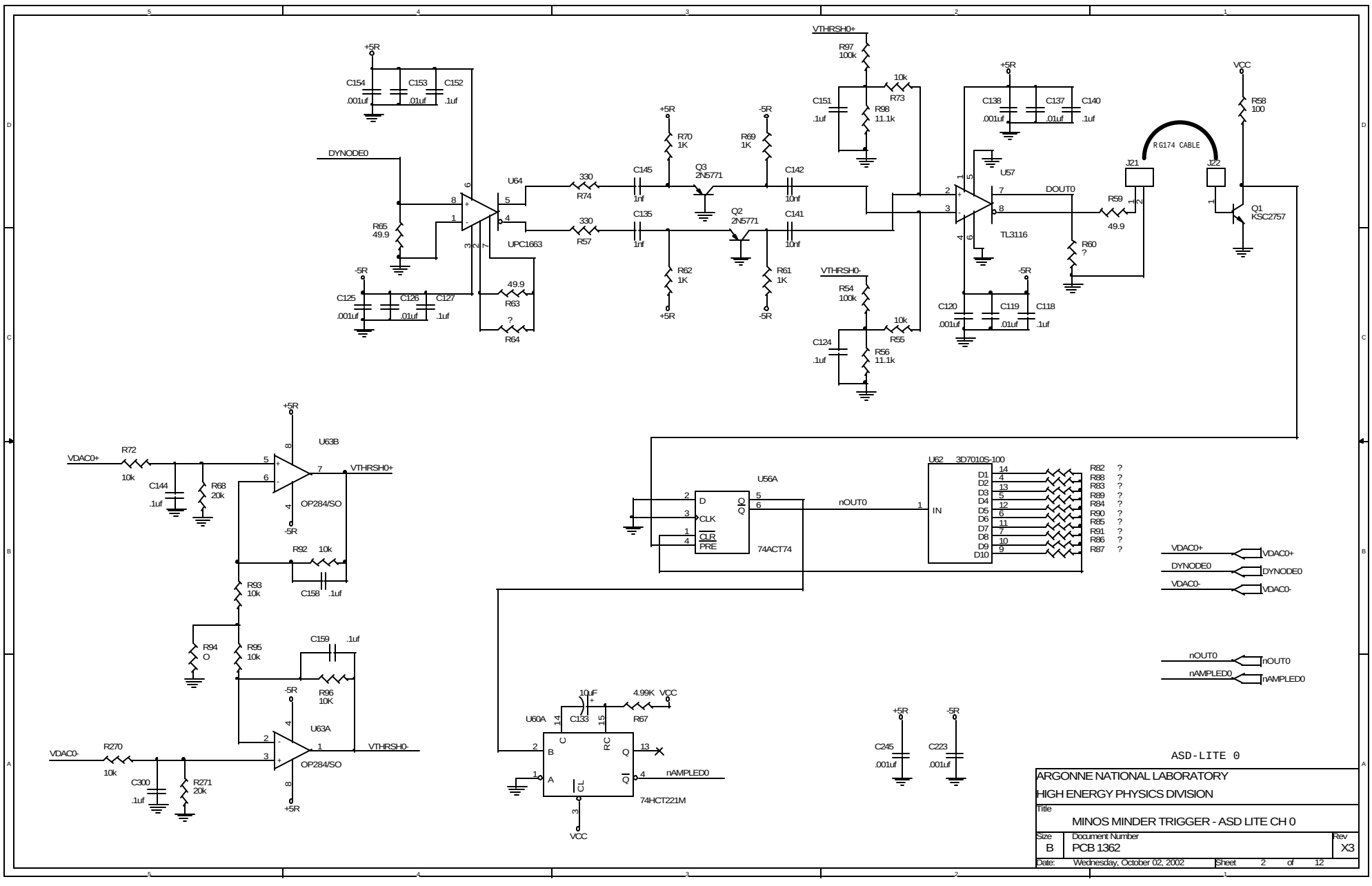
DYNODE0
U64
UPC1663
R65 49.9
R74 330
R57 330
C145 1nf
C135 1nf
Q3 2N5771
Q2 2N5771
R70 1K
R62 1K
R69 1K
R61 1K
C142 10nf
C141 10nf
R63 49.9
R64 ?
VTHRSH0+
VTHRSH0-
R97 100k
R98 11.1k
R54 100k
R56 11.1k
R73 10k
R55 10k
U57
TL3116
DOUT0
R59 49.9
R60 ?
RG174 CABLE
J21
J22
Q1 KSC2757
R58 100
VCC
U63B
OP284/SO
VDAC0+
R72 10k
C144 .1uf
R68 20k
R92 10k
C158 .1uf
R93 10k
R94 O
R95 10k
C159 .1uf
R96 10K
U63A
VDAC0-
R270 10k
C300 .1uf
R271 20k
U56A
74ACT74
nOUT0
U62 3D7010S-100
R82 ?
R88 ?
R83 ?
R89 ?
R84 ?
R90 ?
R85 ?
R91 ?
R86 ?
R87 ?
VDAC0+
DYNODE0
VDAC0-
nOUT0
nAMPLED0
U60A
C133 10uF
R67 4.99K
74HCT221M
C245 .001uf
C223 .001uf
ASD-LITE 0
ARGONNE NATIONAL LABORATORY
HIGH ENERGY PHYSICS DIVISION
Title
MINOS MINDER TRIGGER - ASD LITE CH 0
Size B
Document Number PCB 1362
Rev X3
Date: Wednesday, October 02, 2002
Sheet 2 of 12

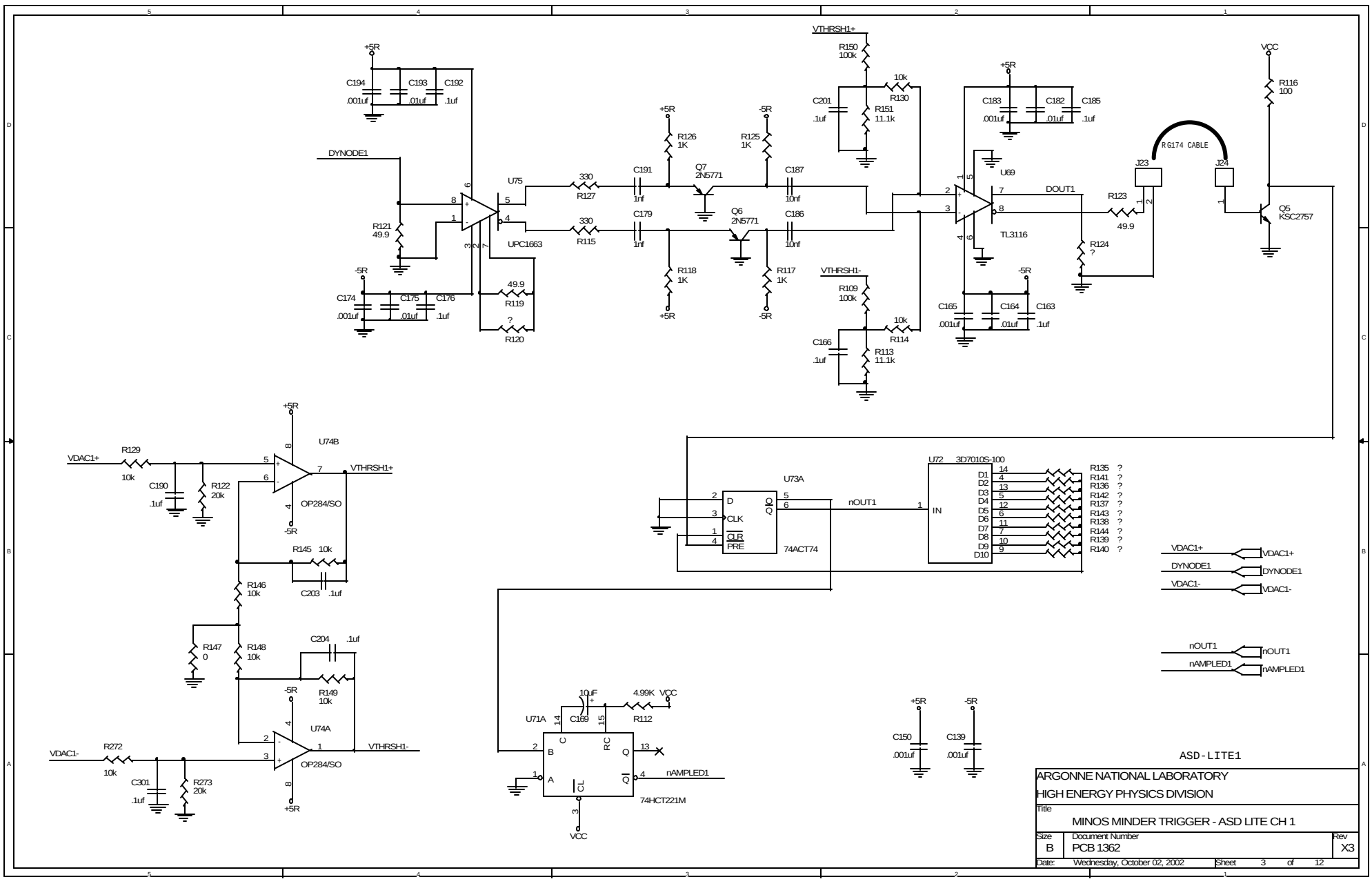
DYNODE1
U75
UPC1663
R121 49.9
R127 330
R115 330
C191 1nf
C179 1nf
Q7 2N5771
Q6 2N5771
R126 1K
R118 1K
R125 1K
R117 1K
C187 10nf
C186 10nf
R119 49.9
R120 ?
VTHRSH1+
VTHRSH1-
R150 100k
R151 11.1k
R130 10k
R109 100k
R113 11.1k
R114 10k
U69
TL3116
DOUT1
R123 49.9
R124 ?
J23
J24
RG174 CABLE
Q5 KSC2757
R116 100
VCC
U74B
OP284/SO
VDAC1+
R129 10k
C190 .1uf
R122 20k
R145 10k
C203 .1uf
R146 10k
R147 0
R148 10k
C204 .1uf
R149 10k
U74A
VDAC1-
R272 10k
C301 .1uf
R273 20k
U73A
74ACT74
nOUT1
U72 3D7010S-100
R135 ?
R141 ?
R136 ?
R142 ?
R137 ?
R143 ?
R138 ?
R144 ?
R139 ?
R140 ?
U71A
C189 10uF
R112 4.99K
74HCT221M
nAMPLED1
C150 .001uf
C139 .001uf
ASD-LITE1
ARGONNE NATIONAL LABORATORY
HIGH ENERGY PHYSICS DIVISION
Title
MINOS MINDER TRIGGER - ASD LITE CH 1
Size B
Document Number PCB 1362
Rev X3
Date: Wednesday, October 02, 2002
Sheet 3 of 12

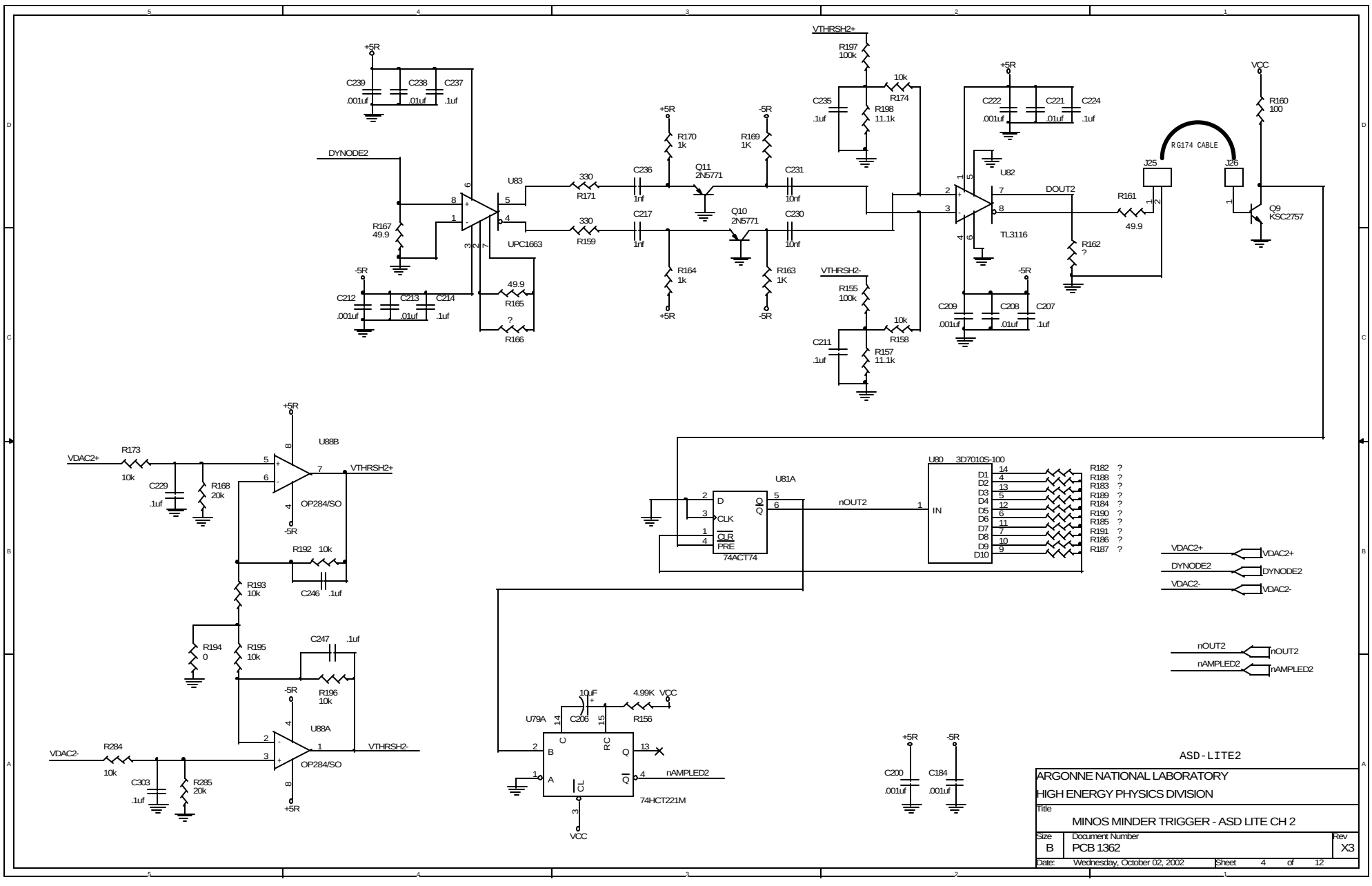

ASD-LITE2

ARGONNE NATIONAL LABORATORY
HIGH ENERGY PHYSICS DIVISION

Title: MINOS MINDER TRIGGER - ASD LITE CH 2

Size	Document Number	Rev
B	PCB 1362	X3

Date: Wednesday, October 02, 2002 Sheet 4 of 12

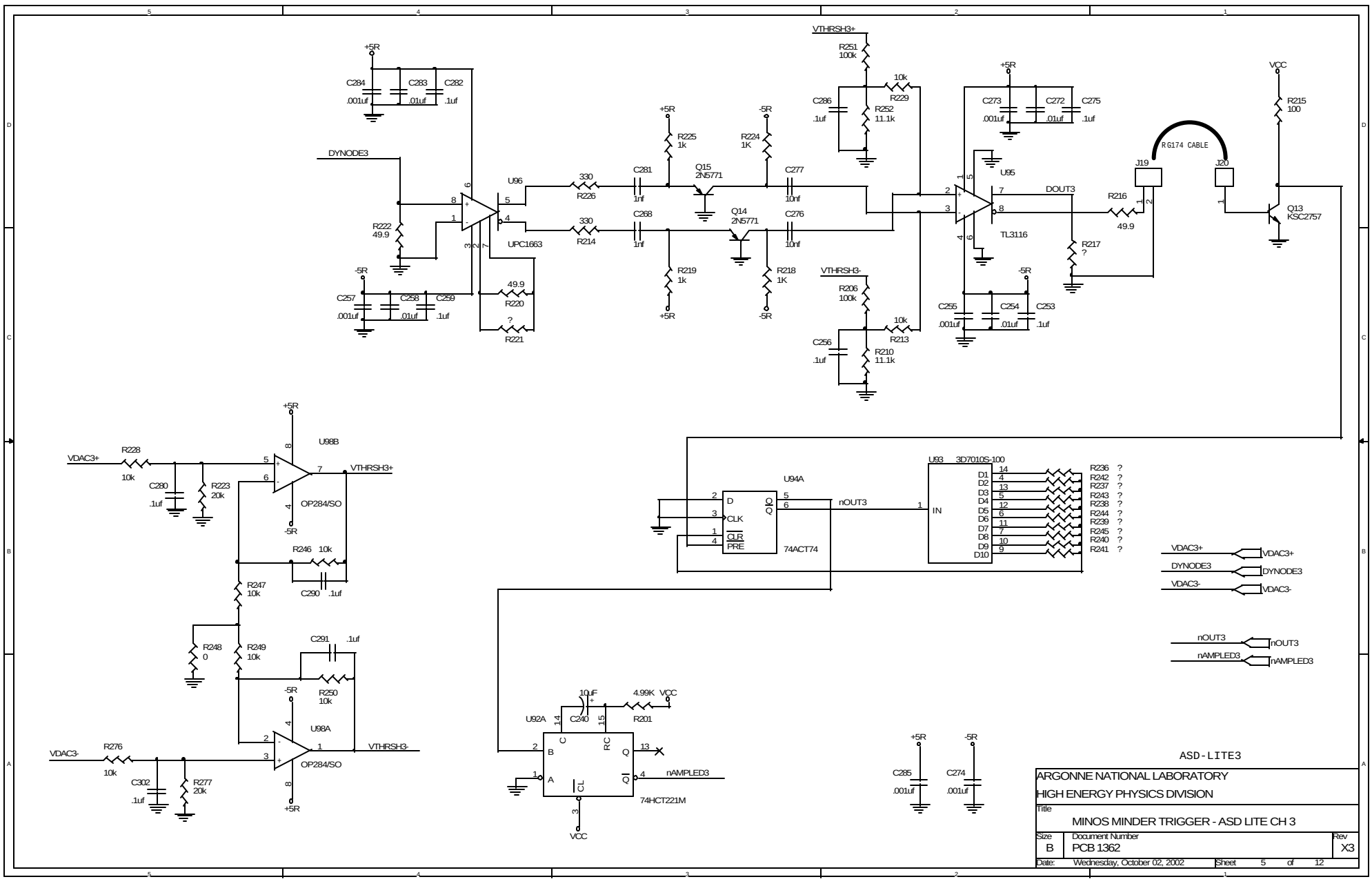
DYNODE3
U96
UPC1663
R222 49.9
R220 49.9
R221 ?
R226 330
R214 330
C281 1nf
C268 1nf
Q15 2N5771
Q14 2N5771
C277 10nf
C276 10nf
R225 1k
R219 1k
R224 1K
R218 1K
VTHRSH3+
R251 100k
R252 11.1k
R229 10k
VTHRSH3-
R206 100k
R210 11.1k
R213 10k
U95
TL3116
DOUT3
R216 49.9
R217 ?
RG174 CABLE
J19
J20
R215 100
Q13 KSC2757
VCC
U98B
OP284/SO
VDAC3+
R228 10k
R223 20k
C280 .1uf
R246 10k
C290 .1uf
R247 10k
R248 0
R249 10k
C291 .1uf
R250 10k
U98A
VDAC3-
R276 10k
C302 .1uf
R277 20k
VTHRSH3-
U94A
74ACT74
nOUT3
U93 3D7010S-100
R236 ?
R242 ?
R237 ?
R243 ?
R238 ?
R244 ?
R239 ?
R245 ?
R240 ?
R241 ?
VDAC3+
DYNODE3
VDAC3-
nOUT3
nAMPLED3
U92A
C240 10uF
R201 4.99K
74HCT221M
C285 .001uf
C274 .001uf
ASD-LITE3
ARGONNE NATIONAL LABORATORY
HIGH ENERGY PHYSICS DIVISION
Title
MINOS MINDER TRIGGER - ASD LITE CH 3
Size B
Document Number PCB 1362
Rev X3
Date: Wednesday, October 02, 2002
Sheet 5 of 12

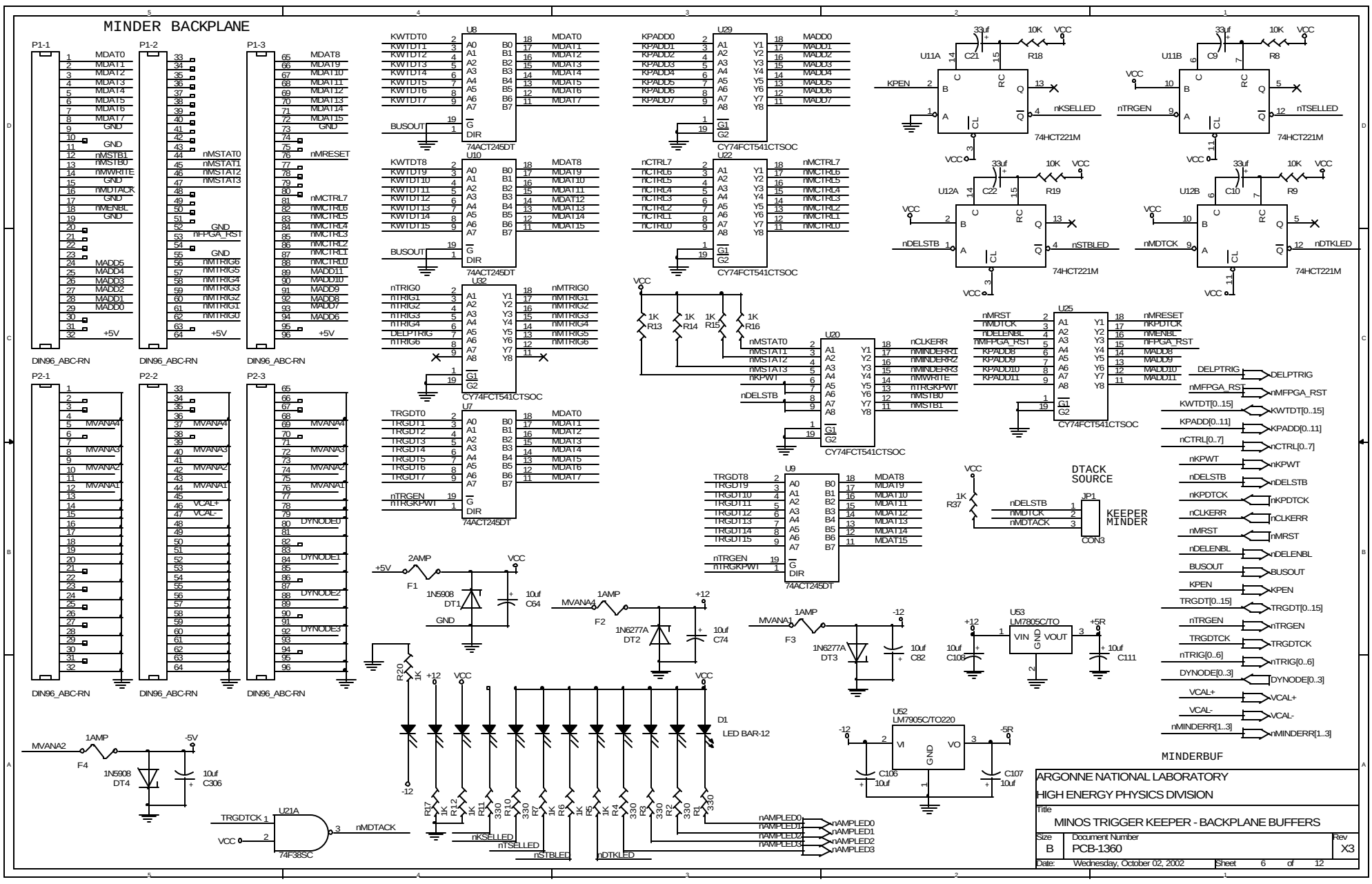
MINDER BACKPLANE
P1-1
P1-2
P1-3
DIN96_ABC-RN
P2-1
P2-2
P2-3
U8
U10
U32
U7
74ACT245DT
U29
U22
CY74FCT541CTSOC
U11A
U11B
U12A
U12B
74HCT221M
U20
U25
U9
U53
LM7805C/TO
U52
LM7905C/TO220
U21A
74F38SC
D1
LED BAR-12
JP1
KEEPER MINDER
CON3
DTACK SOURCE
MINDERBUF
ARGONNE NATIONAL LABORATORY
HIGH ENERGY PHYSICS DIVISION
Title
MINOS TRIGGER KEEPER - BACKPLANE BUFFERS
Size
B
Document Number
PCB-1360
Rev
X3
Date: Wednesday, October 02, 2002
Sheet 6 of 12

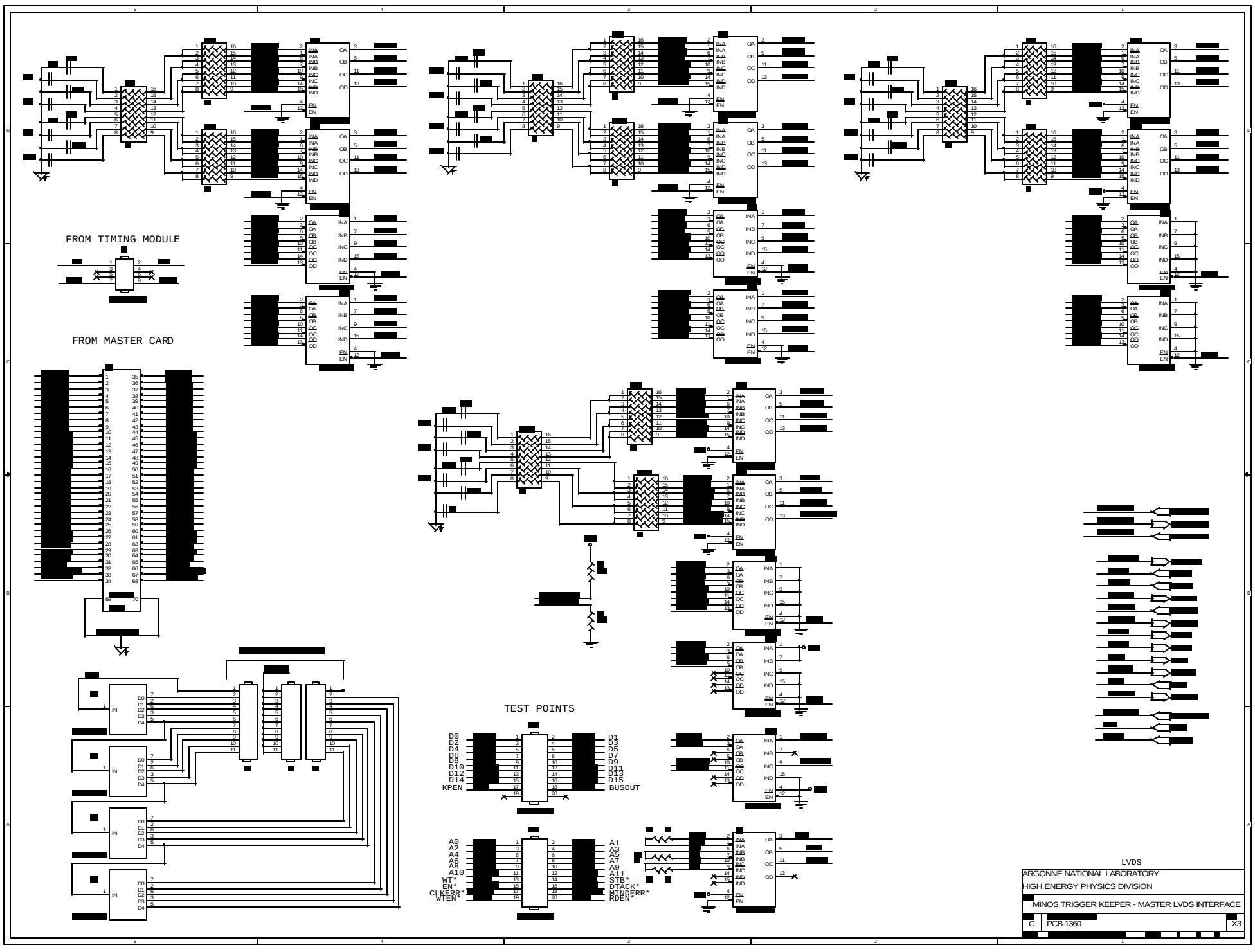
FROM TIMING MODULE
FROM MASTER CARD
TEST POINTS
D0
D2
D4
D6
D8
D10
D12
D14
KPEN
D1
D3
D5
D7
D9
D11
D13
D15
BUSOUT
A0
A2
A4
A6
A8
A10
WT*
EN*
CLKERR*
WTEN*
A1
A3
A5
A7
A9
A11
STB*
DTACK*
MINDERR*
RDEN*
LVDS
ARGONNE NATIONAL LABORATORY
HIGH ENERGY PHYSICS DIVISION
MINOS TRIGGER KEEPER - MASTER LVDS INTERFACE
C
PCB-1360
X3

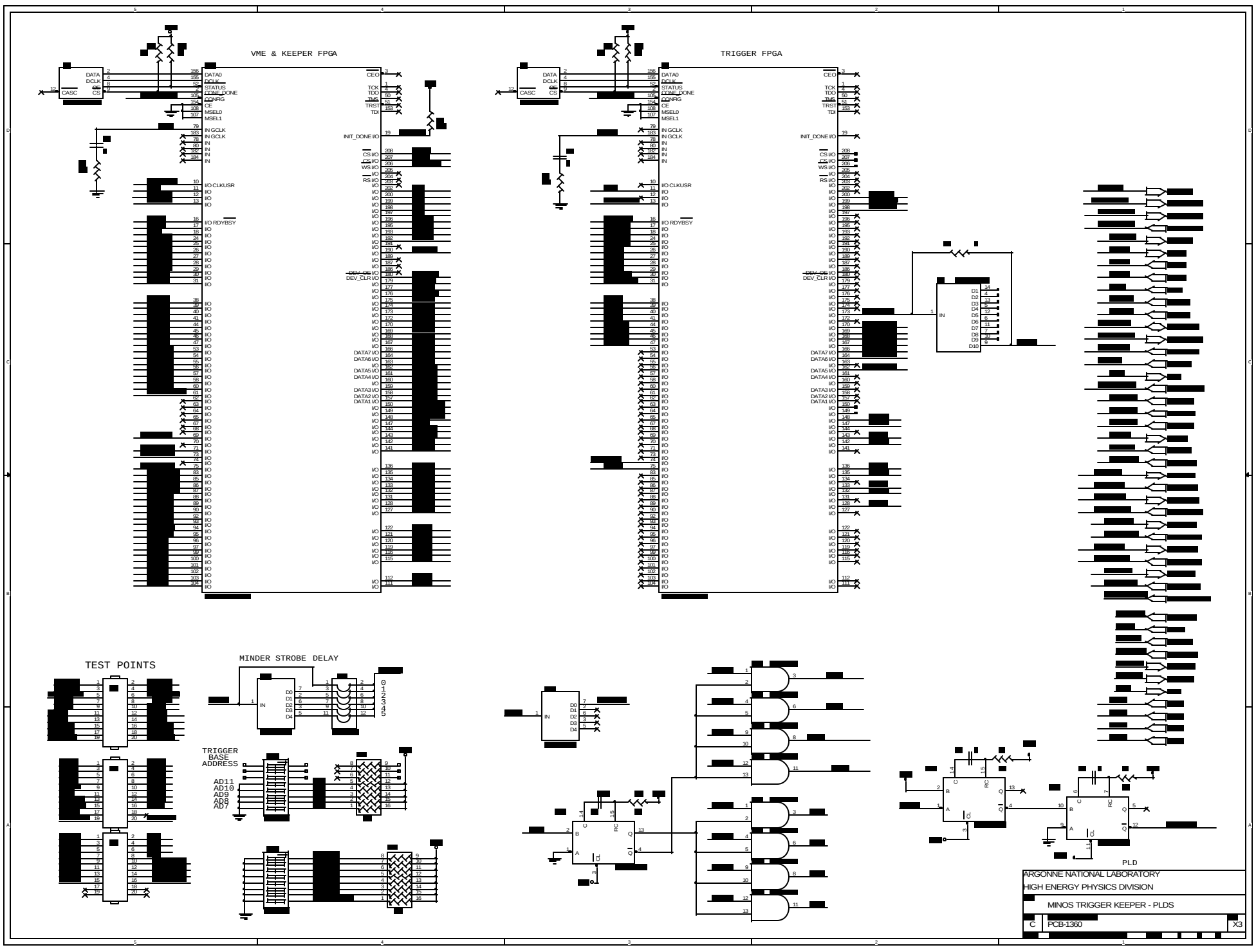
VME & KEEPER FPGA
TRIGGER FPGA
TEST POINTS
MINDER STROBE DELAY
TRIGGER BASE ADDRESS
AD11
AD10
AD9
AD8
AD7
PLD
ARGONNE NATIONAL LABORATORY
HIGH ENERGY PHYSICS DIVISION
MINOS TRIGGER KEEPER - PLDS
C
PCB-1360
X3

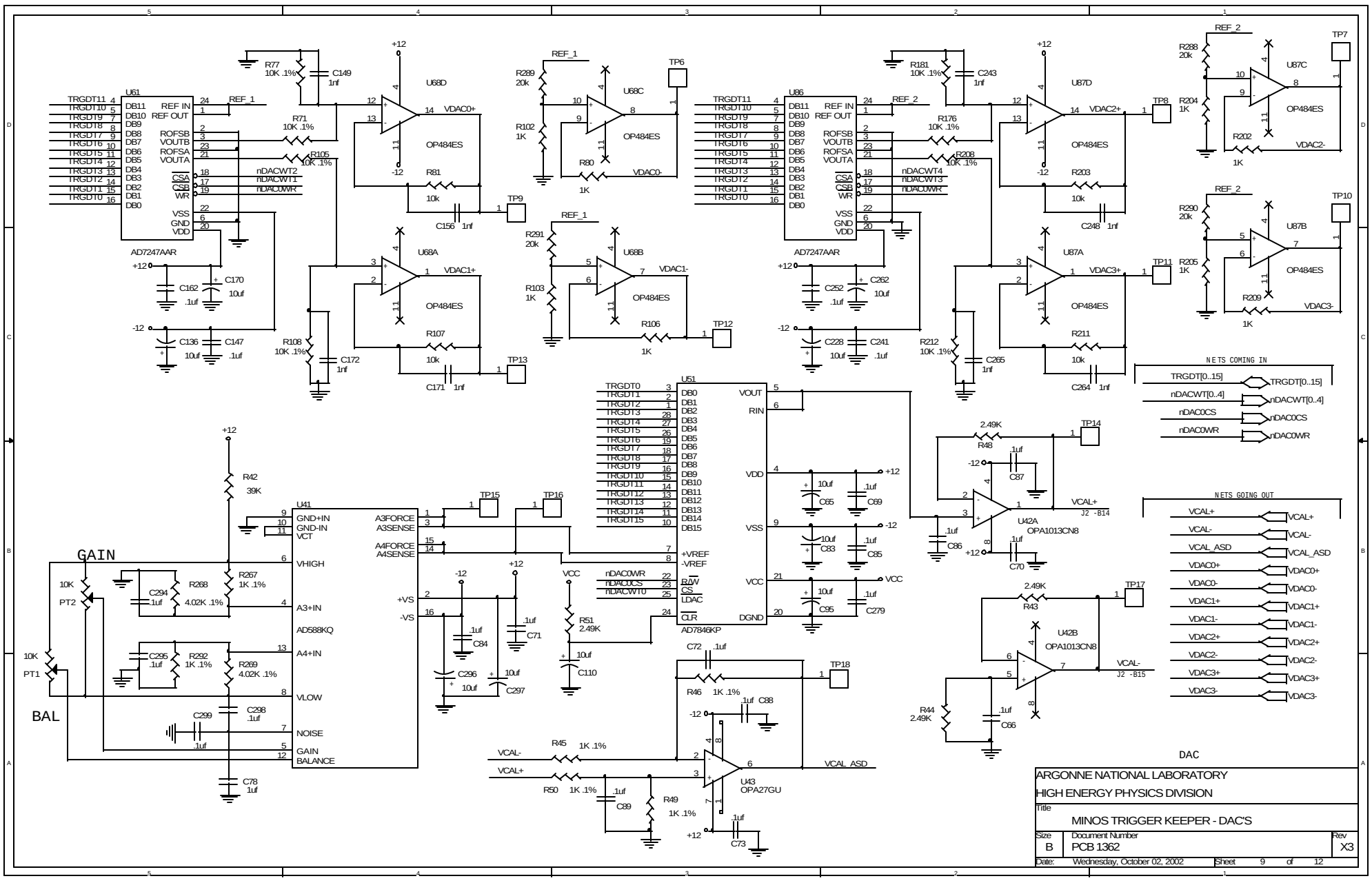
U61
AD7247AAR
U86
AD7247AAR
U68A
U68B
U68C
U68D
U87A
U87B
U87C
U87D
OP484ES
U51
AD7846KP
U41
AD588KQ
U42A
OPA1013CN8
U42B
OPA1013CN8
U43
OPA27GU
GAIN
BAL
NETS COMING IN
NETS GOING OUT
DAC
ARGONNE NATIONAL LABORATORY
HIGH ENERGY PHYSICS DIVISION
Title
MINOS TRIGGER KEEPER - DAC'S
Size
B
Document Number
PCB 1362
Rev
X3
Date:
Wednesday, October 02, 2002
Sheet
9
of
12

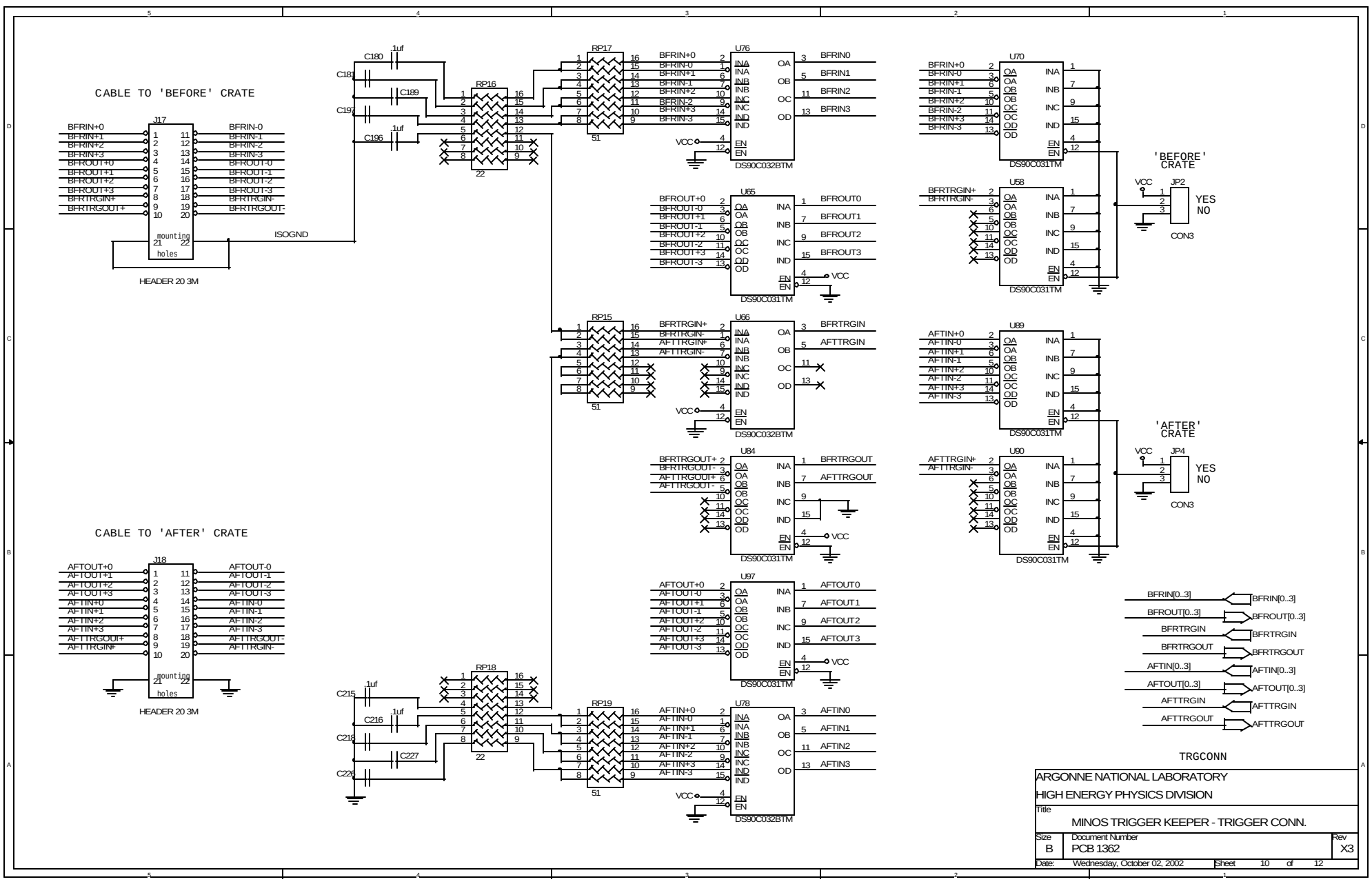
CABLE TO 'BEFORE' CRATE
J17
HEADER 20 3M
CABLE TO 'AFTER' CRATE
J18
HEADER 20 3M
ISOGND
RP16
RP17
RP15
RP18
RP19
U76
U65
U66
U84
U97
U78
DS90C032BTM
U70
U58
U89
U90
DS90C031TM
'BEFORE' CRATE
'AFTER' CRATE
JP2
JP4
YES
NO
CON3
TRGCONN
ARGONNE NATIONAL LABORATORY
HIGH ENERGY PHYSICS DIVISION
MINOS TRIGGER KEEPER - TRIGGER CONN.
Size B
Document Number PCB 1362
Rev X3
Date: Wednesday, October 02, 2002
Sheet 10 of 12

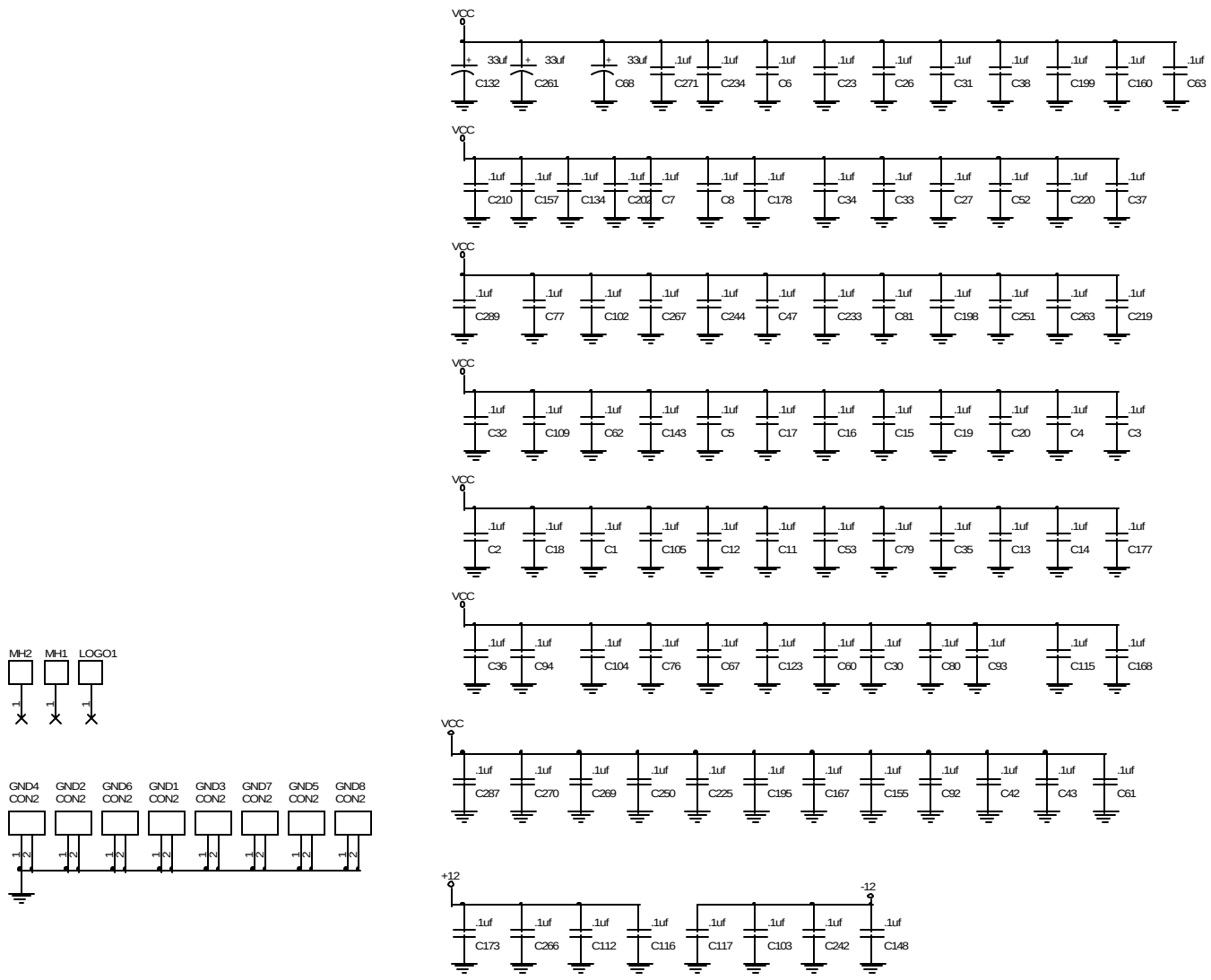

CAPS

ARGONNE NATIONAL LABORATORY
HIGH ENERGY PHYSICS DIVISION

Title: MINOS TRIGGER KEEPER - BYPASS CAPS.

Size	Document Number	Rev
B	PCB-1360	X3

Date: Wednesday, October 02, 2002 Sheet 11 of 12

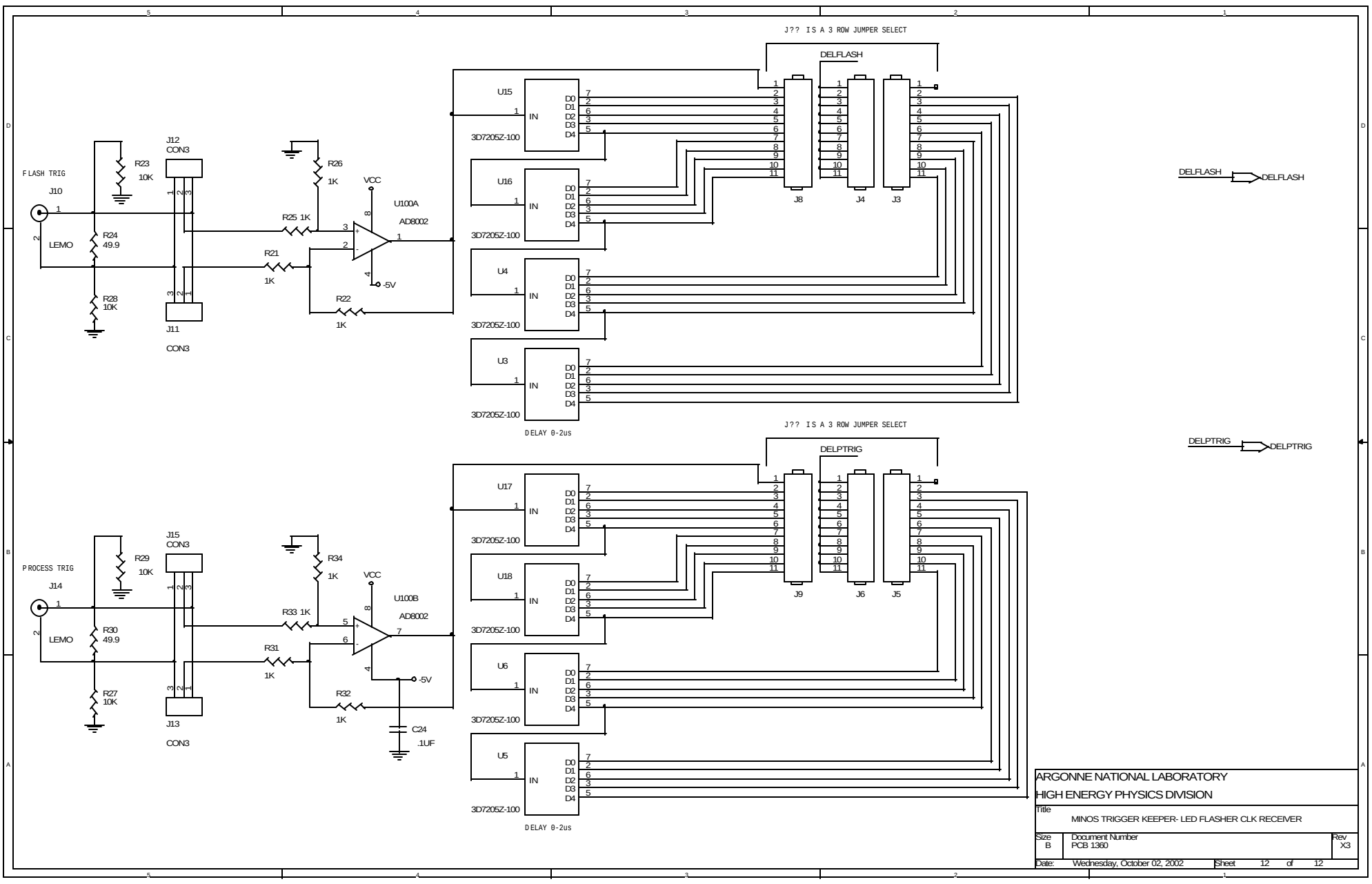

ARGONNE NATIONAL LABORATORY
HIGH ENERGY PHYSICS DIVISION

Title	MINOS TRIGGER KEEPER- LED FLASHER CLK RECEIVER	
Size B	Document Number PCB 1360	Rev X3
Date: Wednesday, October 02, 2002	Sheet 12 of 12	