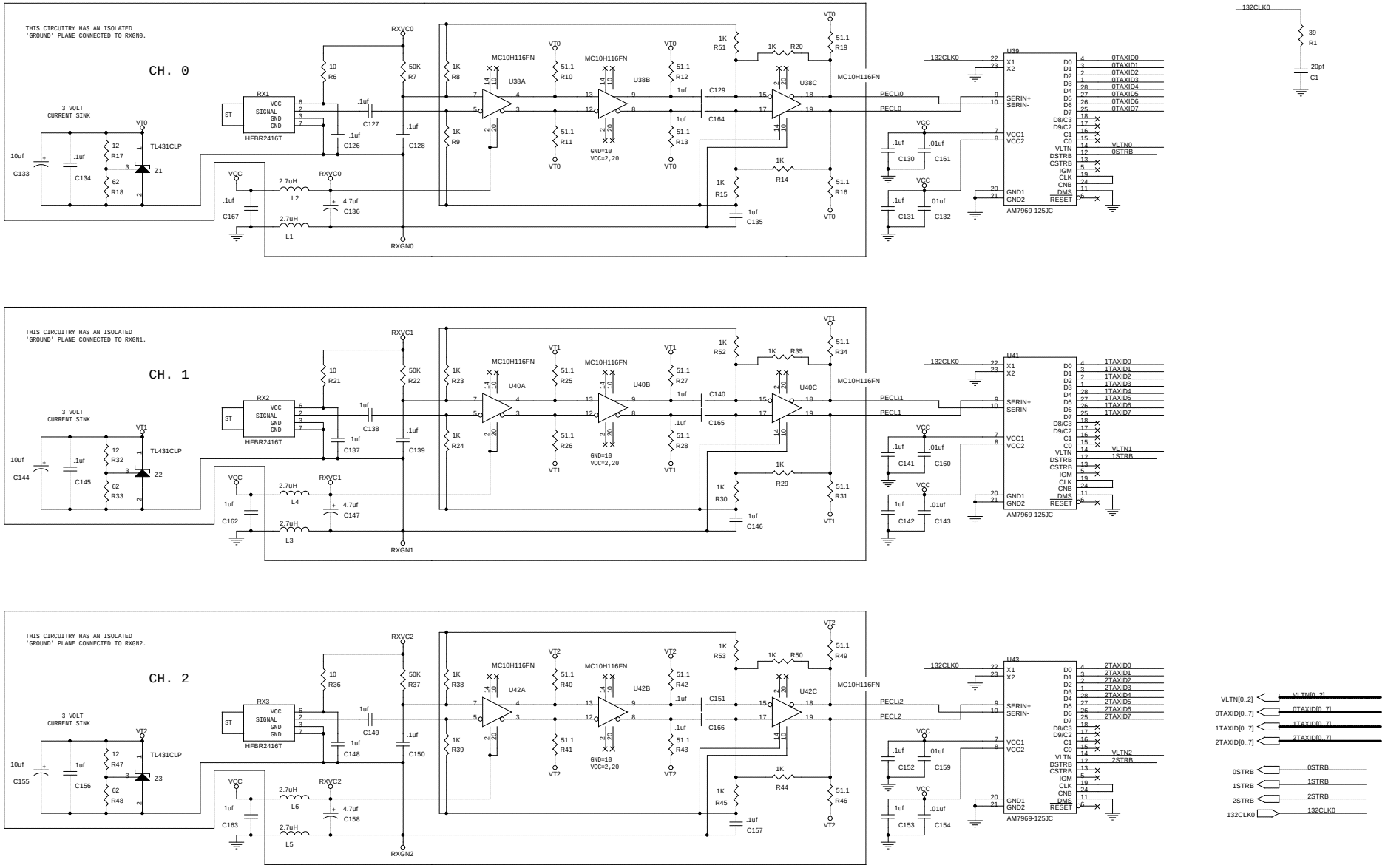

FIBERRX0.sch

ARGONNE NATIONAL LABORATORY

HIGH ENERGY PHYSICS DIVISION

Title: CDF RECES - FIBER RECEIVER CHANNELS 0-2

Size	Document Number	Rev
C	PCB 1307	

Date: Friday, November 30, 2001 Sheet 2 of 13