ATLAS TDAQ

- Reminder of the trigger scheme
- Region of Interest Builder and Supervisor progress
- Planning for TDAQ production

Argonne + MSU (close collaboration on L1/L2 interface and on L2 software)
John Dawson, Gary Drake, Jim Schlereth & R. Blair
Reiner Hauser,Maris Abolins,Yuri Ermolin & Bernard Pope
Also UCI (Andy Lankford, G. Unel, S. Kolos) & Wisc. (Sau Lan Wu, Werner Wiedenmann, Haimo Zobernig)

TDR Complete and 10% Testbed System Assembled

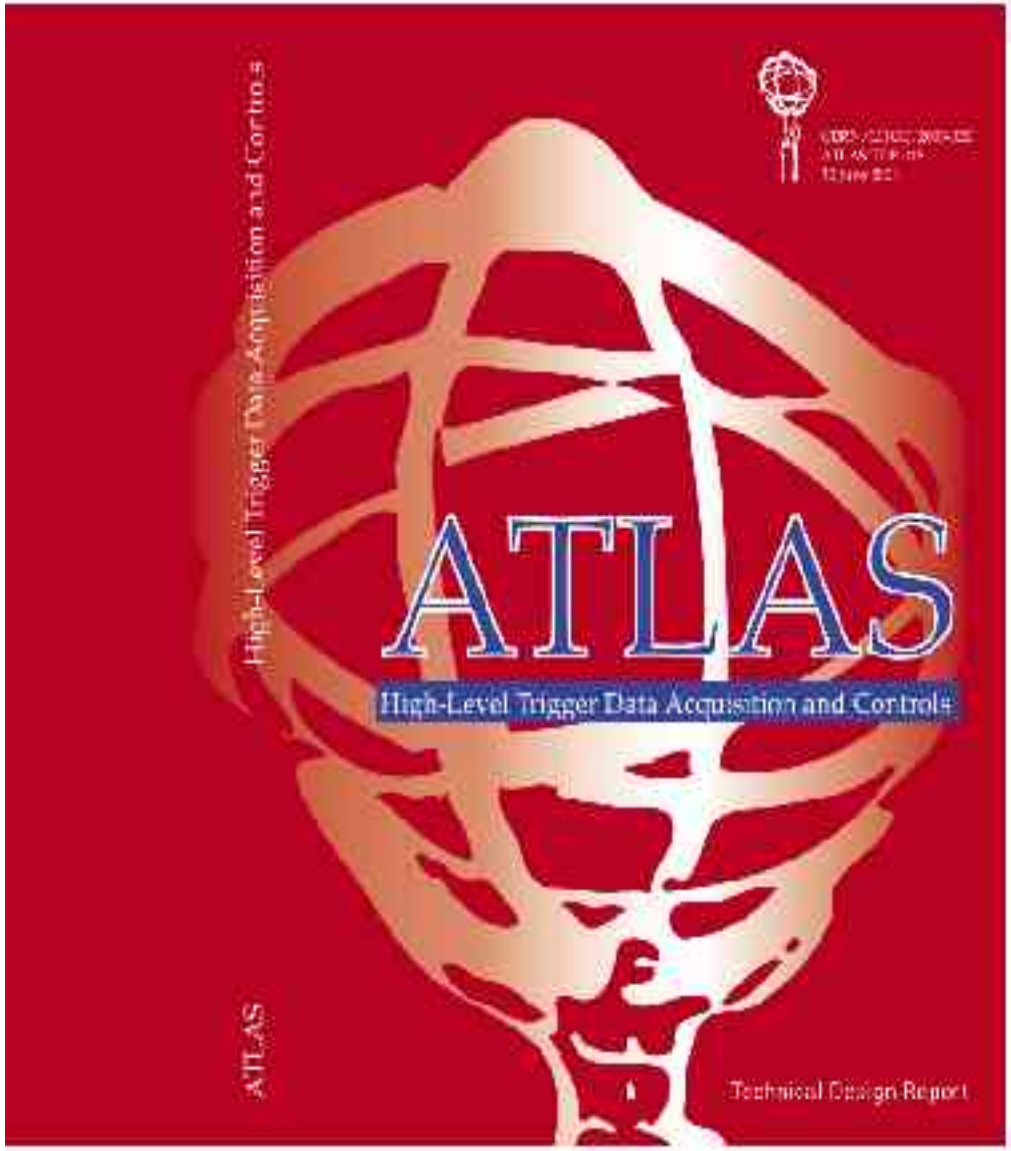

- **TDR complete (accepted by LHCC)**
- **10% testbed built and used for TDR**
- **Plan to use final design to instrument '04 testbeam (multiple detectors to be read out)**

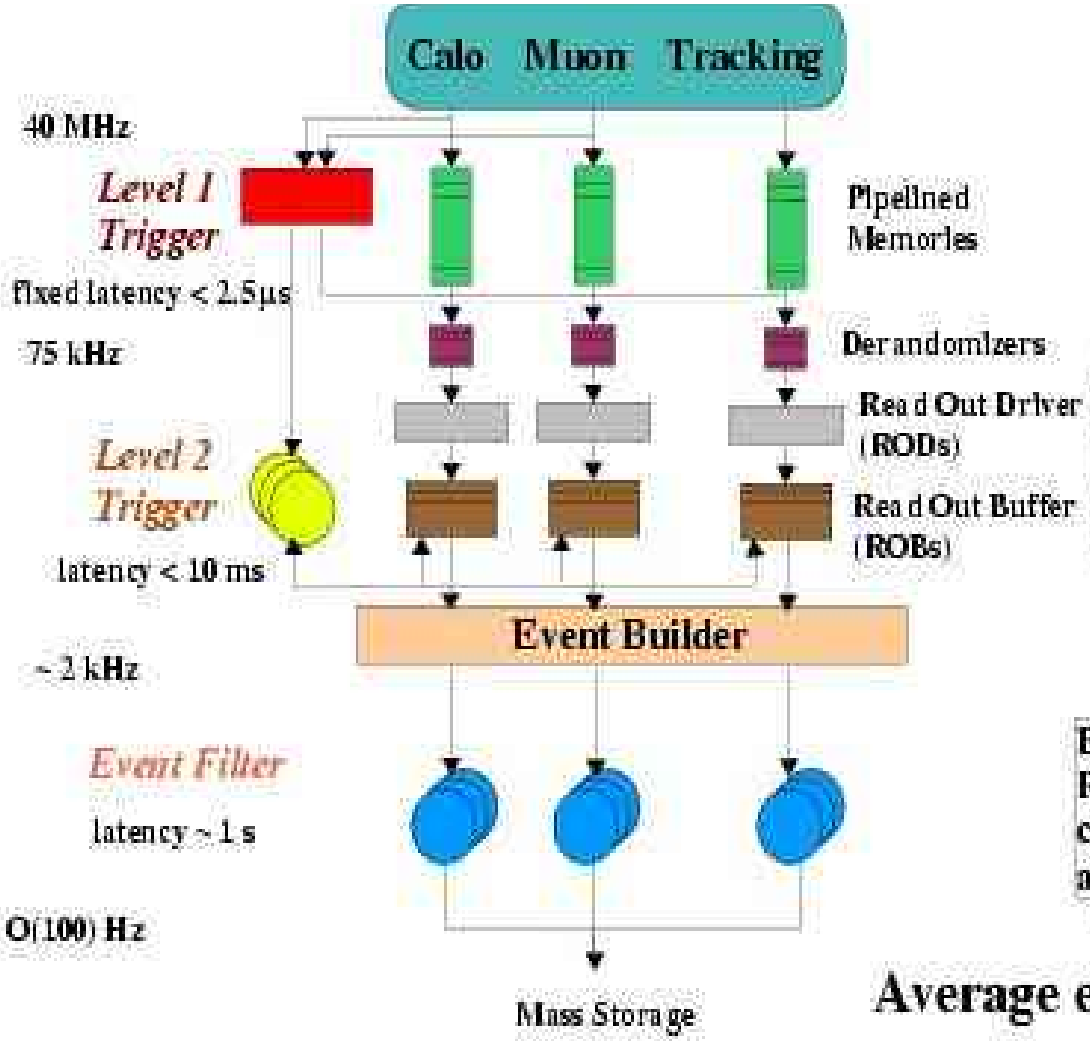

Level 1: coarse granularity calorimeter and muon trigger stations only

Level 2: full granularity data from all detectors; Regions of Interest (ROI) from Level 1 to reduce data access to ROBs (~2 % of full event)

Eventfilter: access to full event data. Refine LVL2 selection; event classification; monitoring, best available alignment and calibration data;

Average event size: ~1.5 MByte

Deployment view

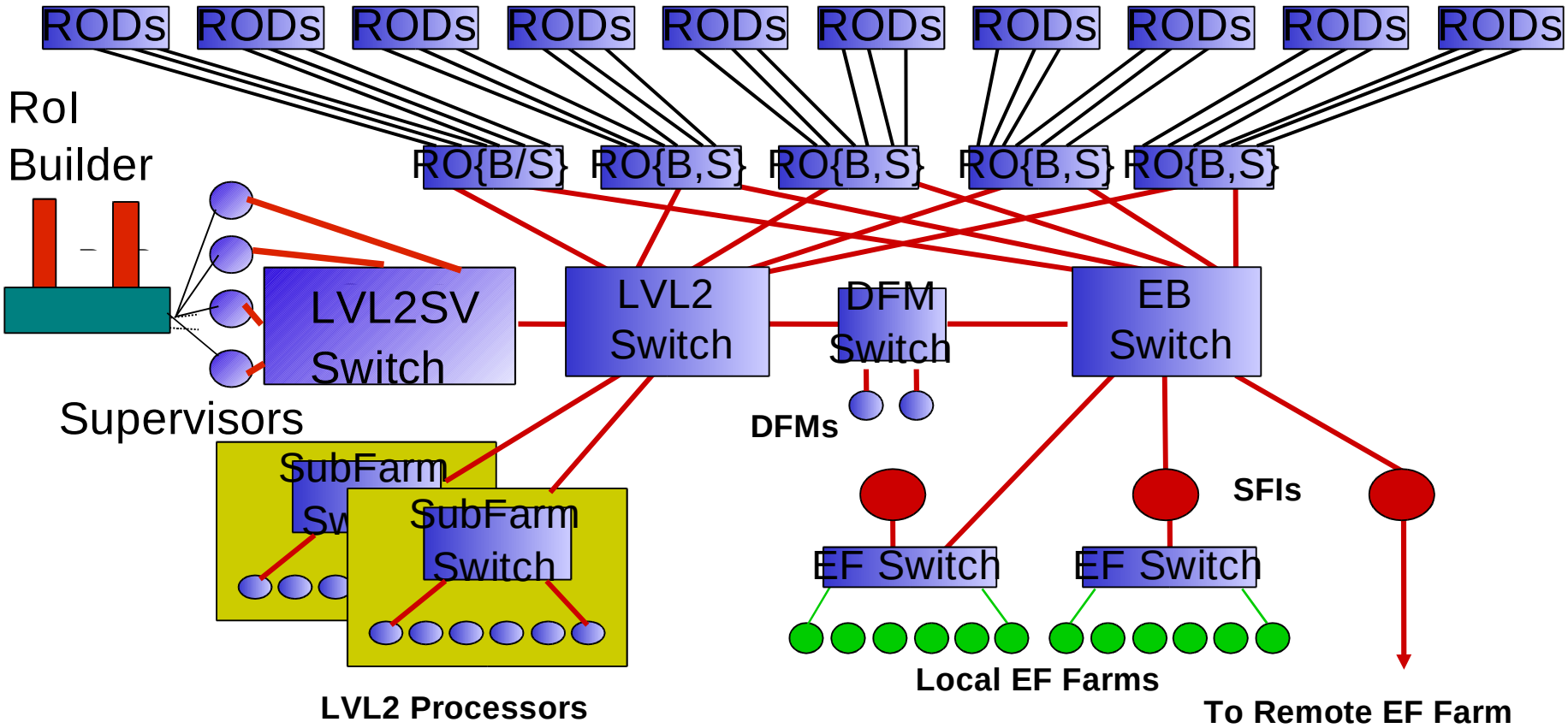

Total Bandwidth through Switch ca 10 GB/s
Today: single switch with non-blocking
32 GB/s available (CISCO, Foundry,..)

1

HLT Milestones

- EF Data Monitoring ready for TestBeam 31.03.04
- HLT ready for vertical slice at TestBeam 31.07.04
  - Preparation begins immediately
- Pre-series farm racks PRR 30.09.04
  - In order to have system installed in 2005
- Exploitation of HLT in combined testbeam completed 31.10.04
- Infrastructure software FDR 28.02.05
  - Review design following feedback from CBTB & test-bed studies
- Selection software FDR 31.03.05
  - Review design following feedback from CBTB & time up to then
- Cosmic run farm racks PRR 30.09.05
  - For use in Cosmic run in August 2006

HLT Milestones

- **Infrastructure software RMI** **31.03.06**
  - **Software ready for installation for cosmic run**
- **Selection software RMI** **30.06.06**
  - **Software ready for installation for cosmic run**
- **1st physics run (2007) farm racks PRR** **30.09.06**
  - **For use in run starting April 2007**
- **Full physics run (2008) farm racks PRR** **30.09.07**
  - **For use in run starting 2008**

DAQ Milestones - Software I/II

- We are planning 4 major software releases before the final one.
  - For each release, we identify milestones for each of the 4 software
    - 1. Control - 2. Databases - 3. Information services / Monitoring - 4. Dataflow

- Combined test beam release - Ready to be used 30.04.04
  - 1. Supervision of online infrastructure (new feature) 28.02.04
  - 2. Generated Data Access Library & notification mechanism for ConfDB 28.02.04
  - 3. Information sharing services using a new CORBA implementation 28.02.04
  - 4. 1st version of final ROD Crate DAQ 28.02.04
  - Integration 1+2+3+4 31.03.04

- Sub-detector readout release - Ready to be used 30.09.04
  - 1. Segment and resource management (new feature) 30.06.04
  - 2. Online book-keeping (logging and archiving) 30.06.04
  - 3. Monitoring services prototypes according to TDR interfaces 30.06.04
  - 4. Use of diagnostic and verification system for DataFlow 31.07.04
  - Integration 1+2+3+4 31.08.04

DAQ Milestones - Software II/II

- **HLT/DAQ installation release - Ready to be used 30.09.05**
  - (release to be used to install & commission the HLT/DAQ system as a whole)
  - 1. Distributed supervision and expert system (new feature) 30.06.05
  - 2. Conditions database online interface 30.06.05
  - 3. Archiving monitoring data 30.06.05
  - 4. Fault tolerance & error handling in DataFlow 31.07.05
  - Integration 1+2+3+4 31.08.05

- **Cosmic-ray run release - Ready to be used 30.09.06**
  - 1. Full support for partitioning 31.05.06
  - 2. Graphical interfaces for control room 31.05.06
    Conditions data browsing tools 31.05.06
  - 3. Global monitoring (data analysis and correlation, archives, display) 31.05.06
  - 4. Consolidated DataFlow software 30.06.06
  - Integration 1+2+3+4 31.07.06
  - Large-scale full-system performance assessment 30.08.06

Baseline Status

- National commitments defined
  - 1/15/04 meeting of the TDAQ Resource Committee introduced a few minor changes, but this will be TDAQ plan presented to next RRB and is consistent with US plan (small shift in EB/LVL2 processors from plan here)
- US plan involves 4 areas
  - Supervisors + RoI Builder (ANL&MSU)
  - Data Acquisition Software (All)
  - Event Selection Software (All)
  - Network and Farm Hardware (All)

10% Scale System Tested

Up to TDR: ‘ ~10%’ DataFlow System test set up

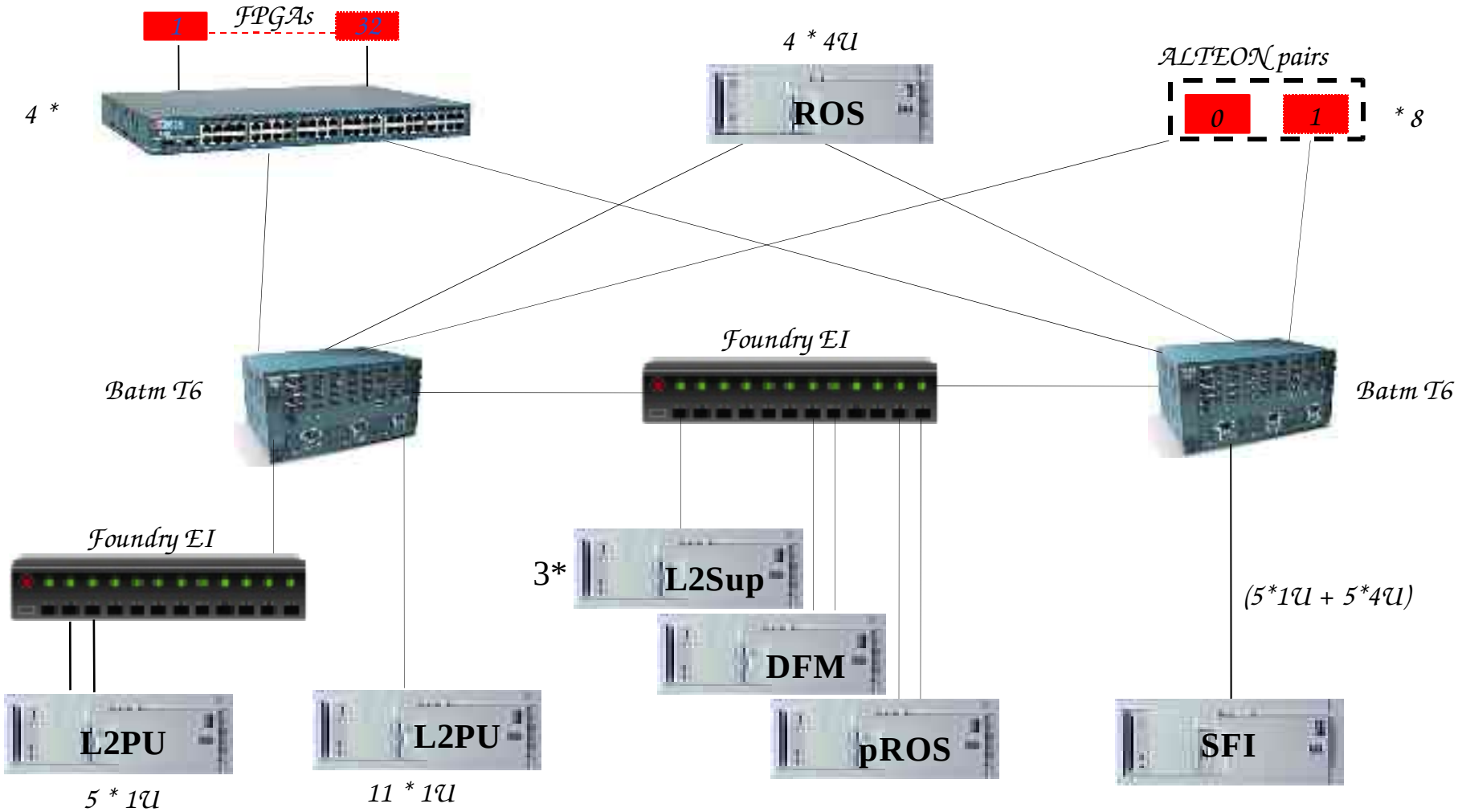

RoI Builder

- Detailed design document complete Intermediate Design Review done (Feb.)
  - Details of layout
    - card counts
    - Interconnections

  Informal feedback from reviewers but no formal report yet.
  - Halogen free cables – need for new cables has lead to some rethinking of interconnections
  - Reviewers may encourage exploring feasibility of PC based RoI Builder (do it in software not hardware)

RoI Builder Design (Review 2/04) – Hardware Being Built

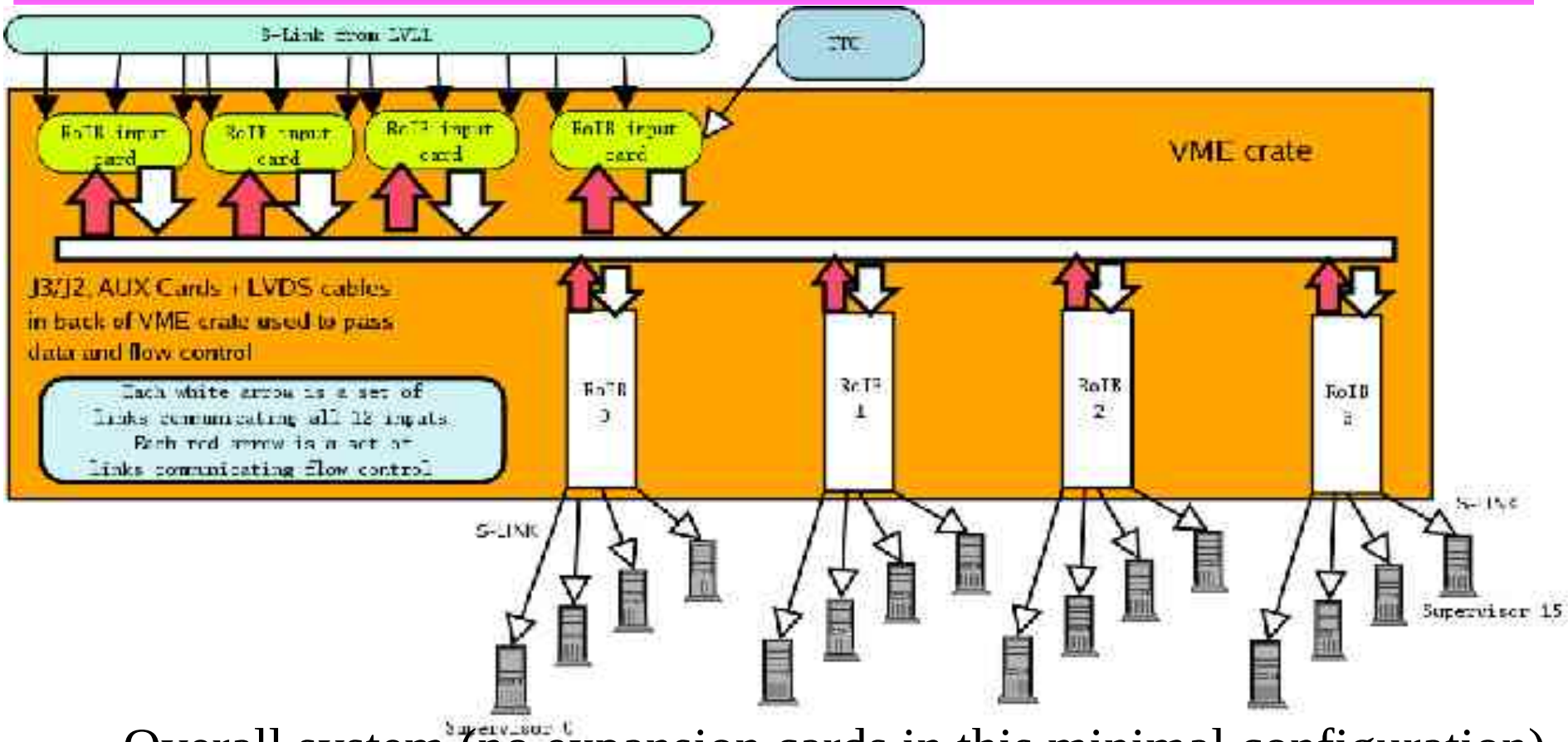

Overall system (no expansion cards in this minimal configuration)

Most connections using LVDS cables behind the crate with AUX cards converting to/from TTL used on the builder and input cards

Region of Interest Builder

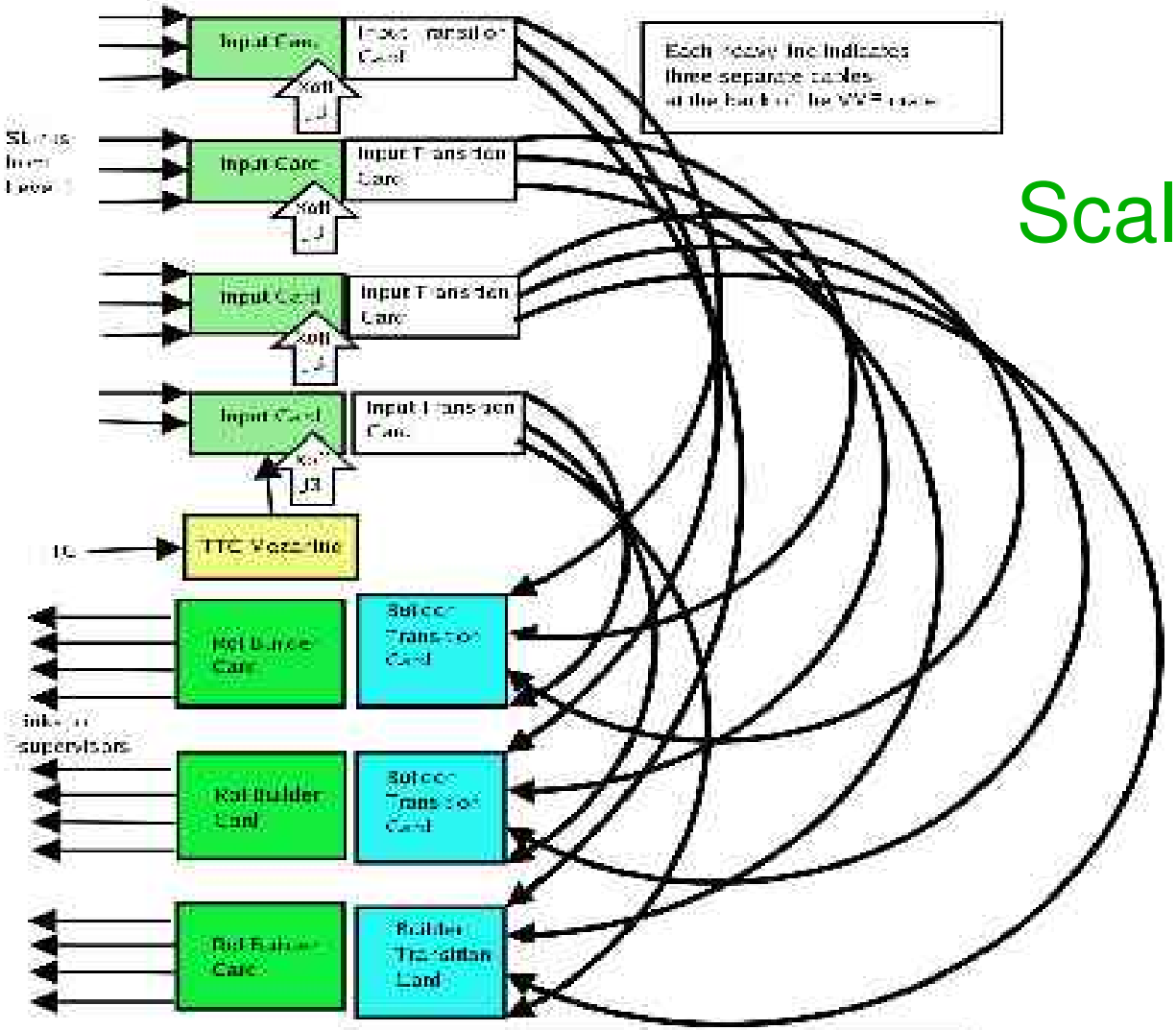

Scalable

Cards Done (so far)

TTC mezzanine

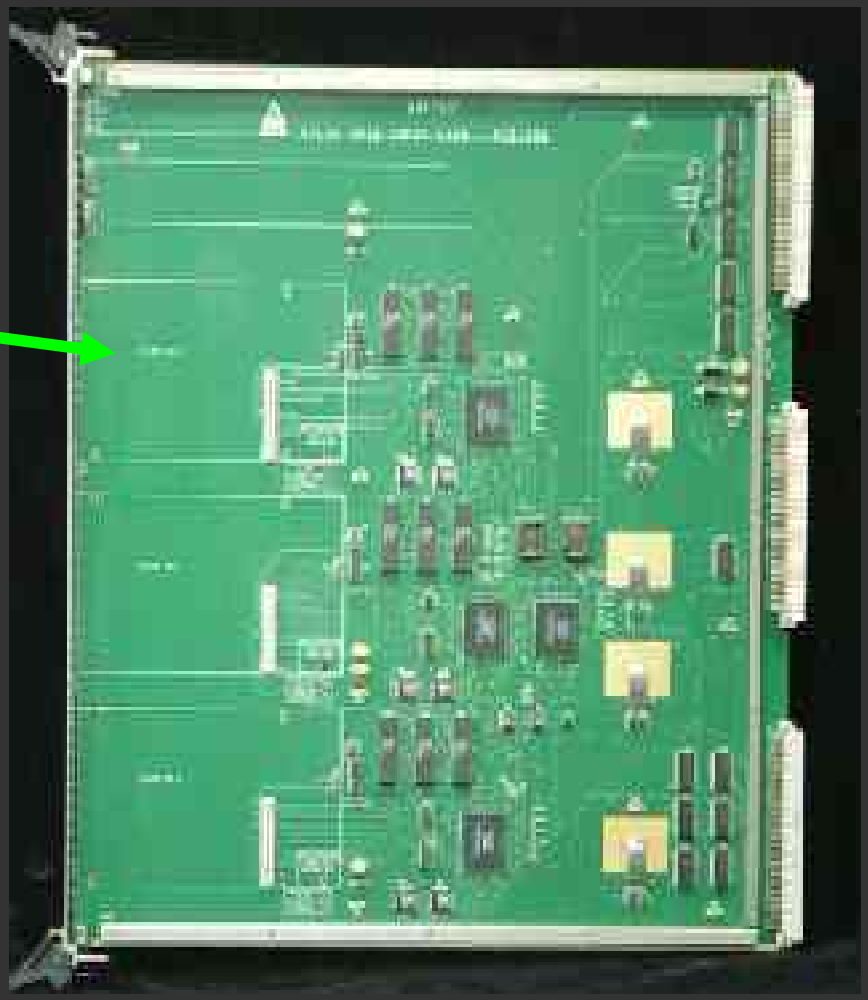

Input Card

RoIB Schedule

- End of May full system for use in TB
- Move to CERN and test interface with MUCTPI (muon LVL1 system)
- Calorimeter interface will follow
- Prepare for more extensive testing during dedicated run period in August

2004 testbeam

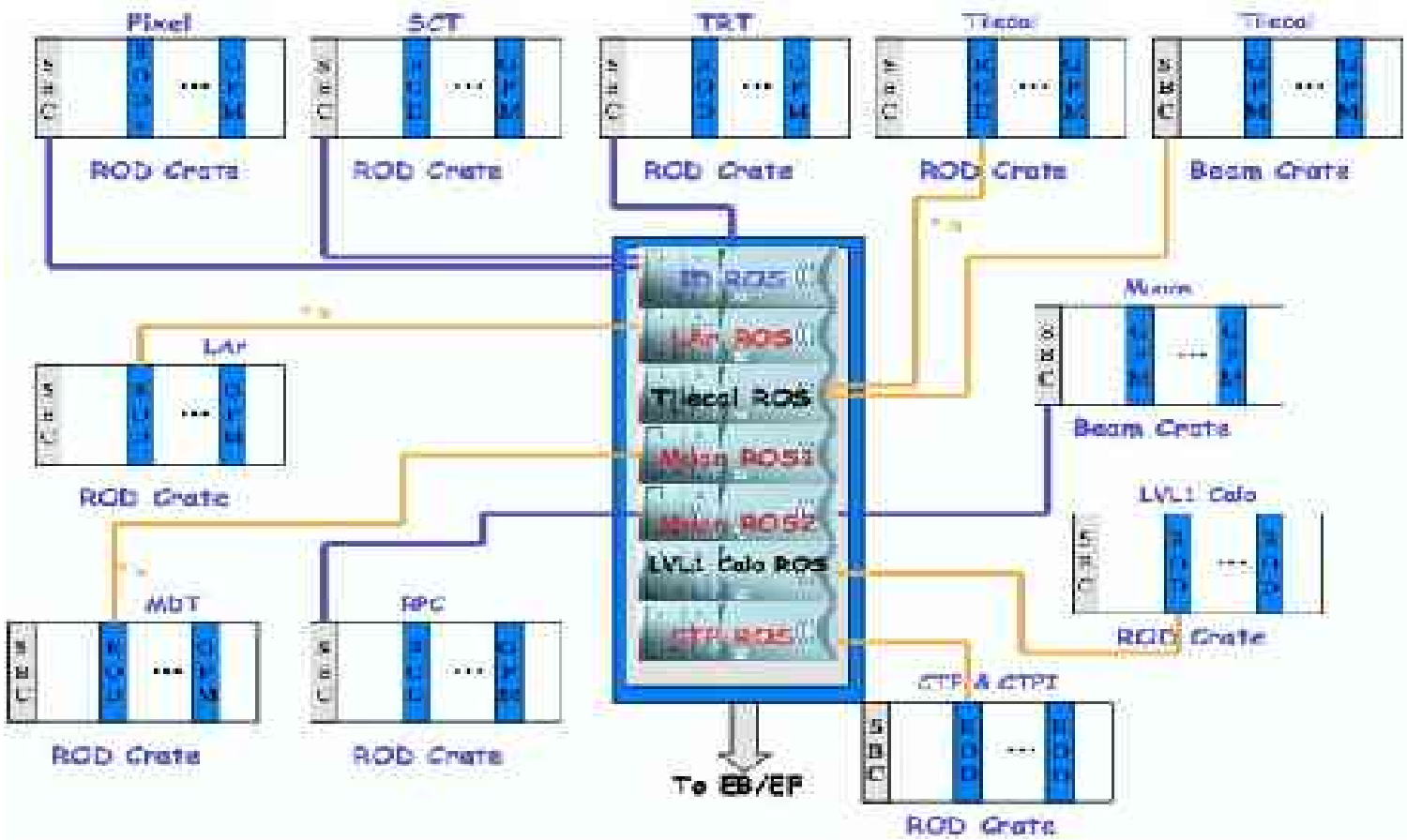

LVL1-DAQ-LVL2-EF vertical slice

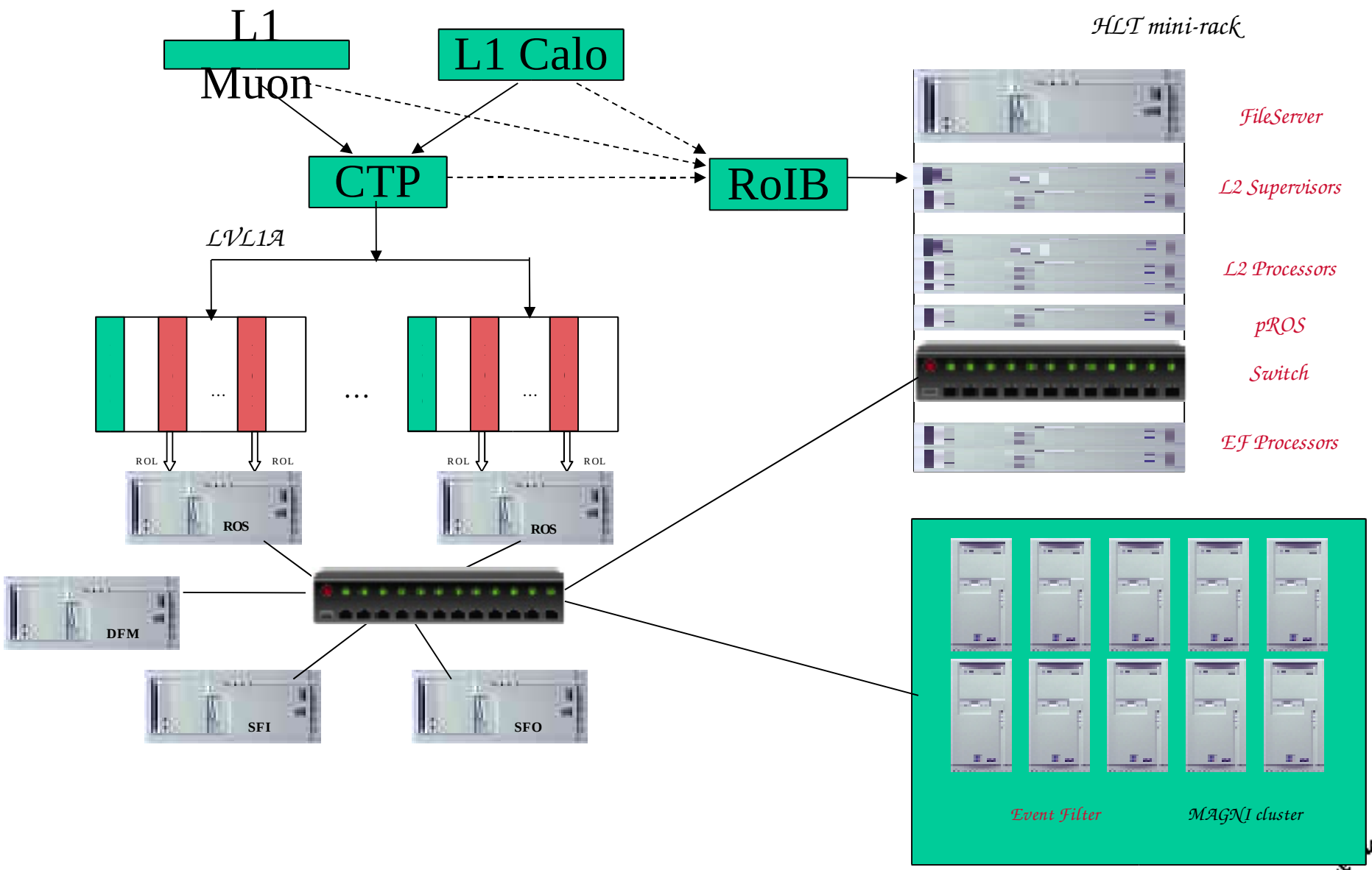

TDAQ Testbeam Objectives

- Support multidetector slice LVL2 not there
  - Most of cycle is in this mode
- August dedicated TDAQ tests
  - Will have full TDAQ slice with LVL1+RoIB+LVL2+EF
  - Up to now TB has run in mode without LVL2 since bandwidth required is very low