ATLAS Detector Movement System
Control System Panel Layout and PLC Wiring Diagram

Revision 6 - December 14, 2006

Jim Grudzinski
Argonne National Laboratory

Connector List		Internal Connection	External Connection
A	Hydrosystem Connection A (37 pin)	Terminal Strip	Hydraulic Unit
C	Hydrosystem Connection C (37 pin)	Terminal Strip	Valve Table
E	Hydrosystem Connection E (37 pin)	Terminal Strip	Valve Table
G	Hydrosystem Connection G (37 pin)	Terminal Strip	Patch Panel
J	Detector Sensor Connections (50 pin)	Terminal Strip	Patch Panel
K	Detector Sensor Connections (50 pin)	Terminal Strip	Patch Panel
L	Air Purge Valve Estop Button (10 pin)	Terminal Strip	Stop Button
S	Liquid Argon Safety Lin Sync. (37 pin)	Terminal Strip 1	LArg Safety Line Sync.
R	Metreel Service Connection	Terminal Strip 1	

Cabinet Parts List

1	PLC Rail 482mm
2	15 x 35mm DIN rail
3	SOLA 10VDC 3A Power Supply
4	PLC Relays SCHRACK MT323024
5	Phoenix Contact Force Guided Relay PSR-SCP-24UC/URM/5X1/2X2
6	STI SR103AM Safety Monitoring Relay

BACK VIEW

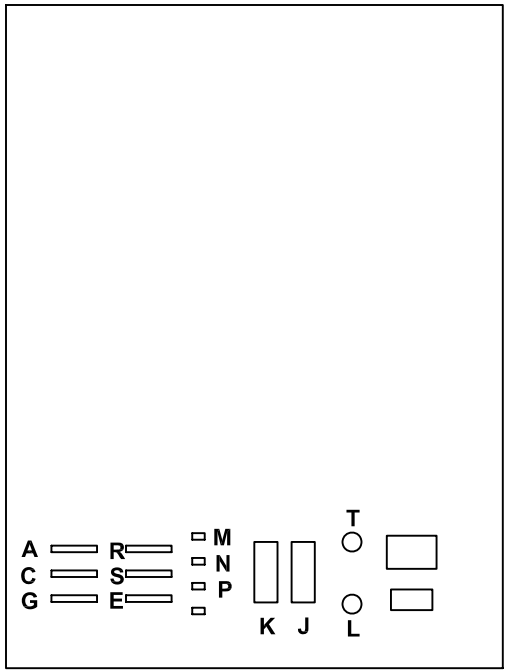

SIDE VIEW

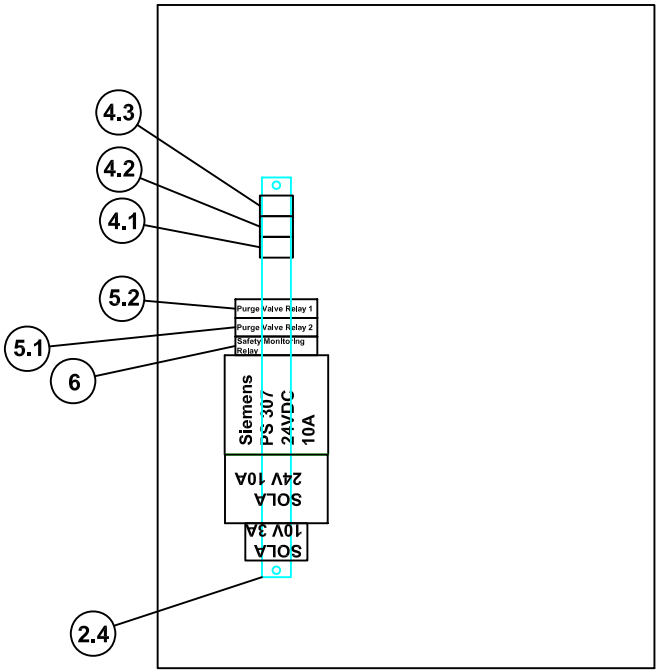

18 U Rack FRONT VIEW

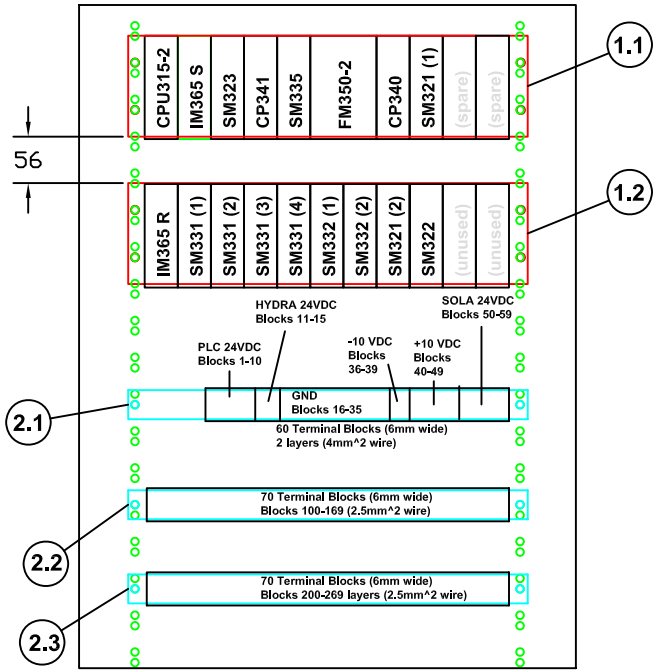

Rack	Logical Slot Address	Module (ID)	Siemens Part Number	Type	Input Address Range	Output Address Range
0	1	PS 307	6ES7 307-1KA00-0AA0	24 VDC Power Supply 10A	-	-
0	2	CPU 315-2 DP	6ES7 315-2AG10-0AB0	Processor	-	-
0	x2	(PROFIBUS 1)		Mobile Panel 170	IB:1-5	QB:1-5
0	3	IM 365 SEND	6ES7 365-0BA01-0AA0	Interface Module	-	-
0	4	SM 323	6ES7 323-1BH01-0AA0	DI 8 / DO 8	I:0.0-0.7	Q:0.0-0.7
0	5	CP 341	6ES7 341-1AH01-0AE0	RS 232 Communication	-	-
0	6	SM 335	6ES7 335-7HG01-0AB0	AI 4 / AO4	PIW:288-303	PQW:288-295
0	7	FM 350-2	6ES7 350-2AH00-0AE0	Hi-Speed Counter	304-318	304-318
0	8	CP 340	6ES7 340-1AH01-0AE0	RS 232 Communication	-	-
0	9	SM321 (1)	6ES7 321-1CH00-0AA0	DI 16 (16 groups 24/48V)	I:20.0-21.7	
0	10	(spare)				
0	11	(spare)				
1	3	IM 365 RECEIVE	6ES7 365-0BA01-0AA0	Interface Module	-	-
1	4	SM 331 (1)	6ES7 331-7KF02-0AB0	AI 8	PIW:384-398	-
1	5	SM 331 (2)	6ES7 331-7KF02-0AB0	AI 8	PIW:400-414	-
1	6	SM 331 (3)	6ES7 331-7KF02-0AB0	AI 8	PIW:416-430	-
1	7	SM 331 (4)	6ES7 331-7KF02-0AB0	AI 8	PIW:432-446	-
1	8	SM 332 (1)	6ES7 332-5HD01-0AB0	AO 4	-	PQW:448-455
1	9	SM 332 (2)	6ES7 332-5HF00-0AB0	AO 8	-	PQW:464-478
1	10	SM 321 (2)	6ES7 321-1BL00-0AA0	DI 32	I:56.0-59.7	-
1	11	SM 322	6ES7 322-1BL00-0AA0	DO 32	-	Q:60.0-63.7

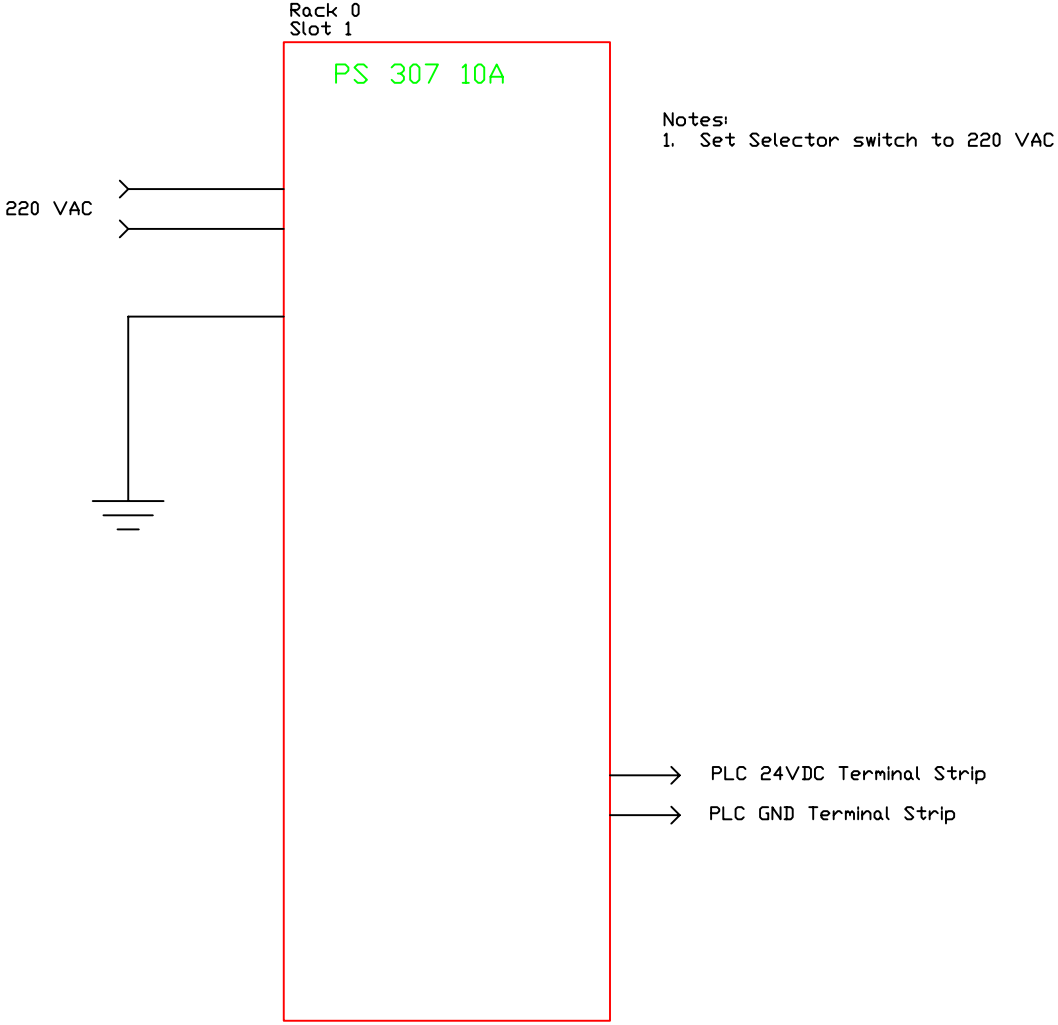

Notes:
1. Set Selector switch to 220 VAC

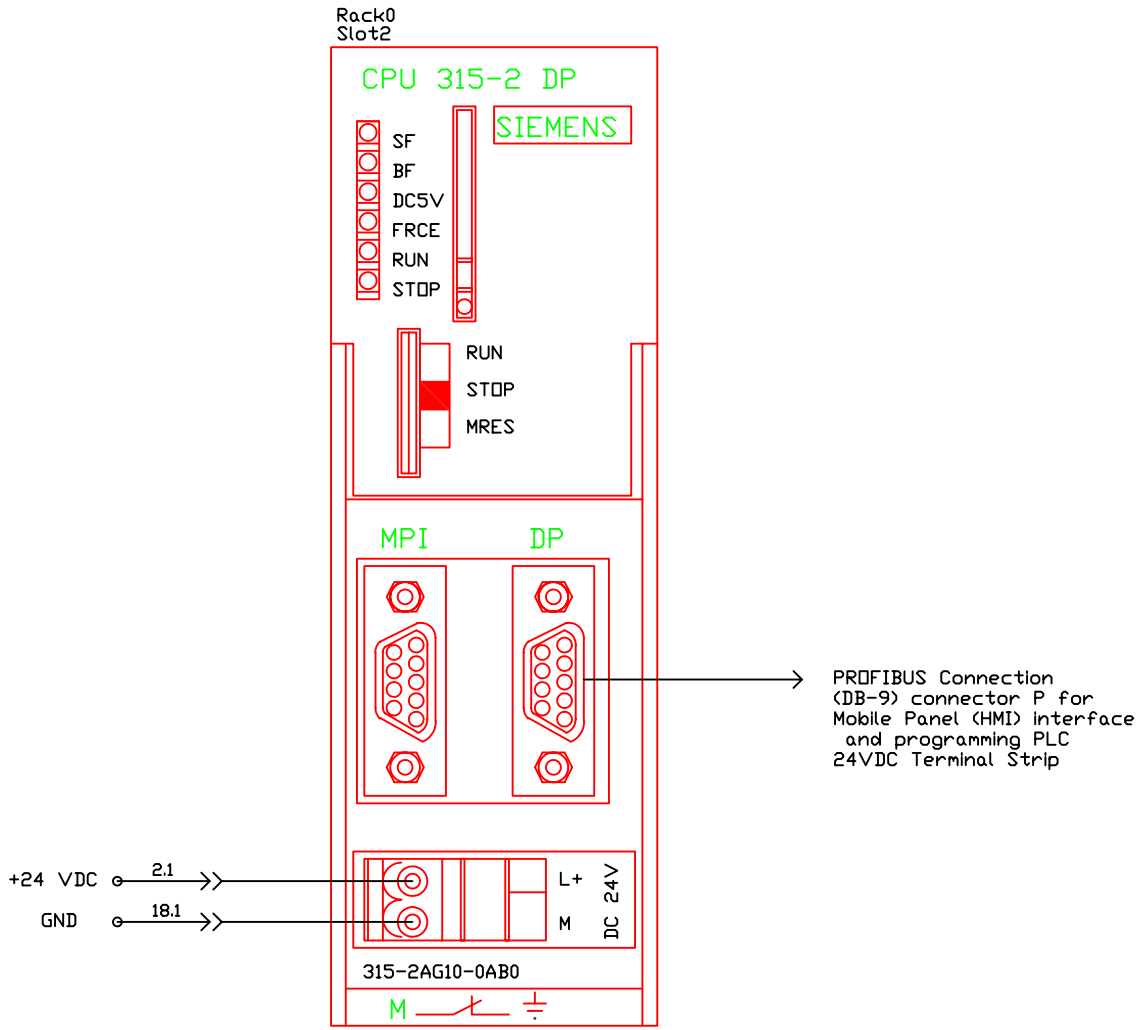
Rack0
Slot2
CPU 315-2 DP
SIEMENS
SF
BF
DC5V
FRCE
RUN
STOP
RUN
STOP
MRES
MPI
DP
PROFIBUS Connection
(DB-9) connector P for
Mobile Panel (HMI) interface
and programming PLC
24VDC Terminal Strip
+24 VDC
2.1
GND
18.1
L+
M
DC 24V
315-2AG10-0AB0
M

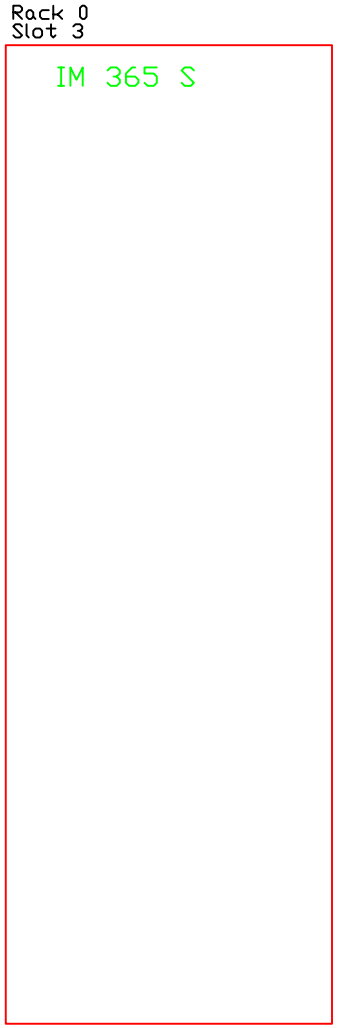
Rack 0
Slot 3
IM 365 S

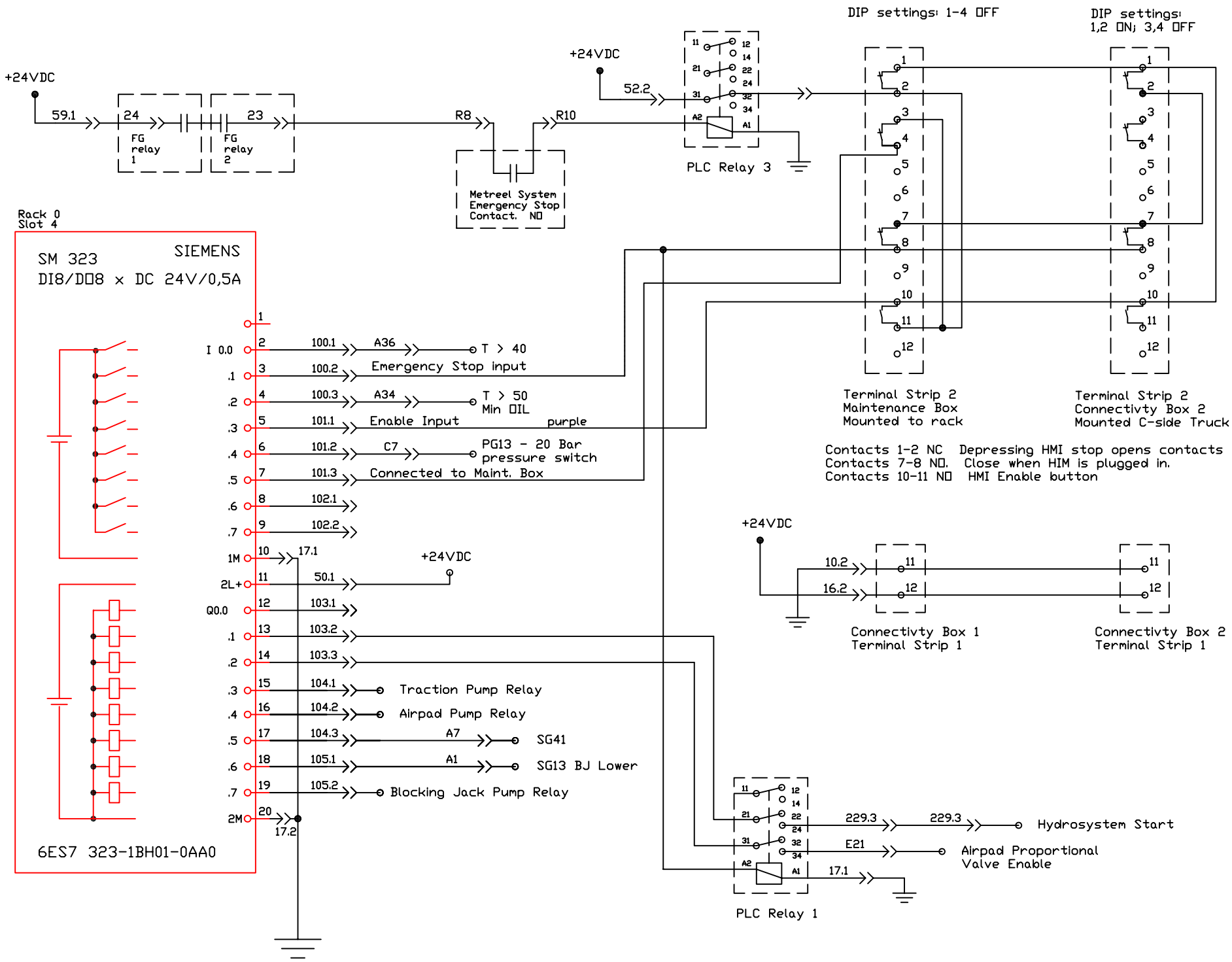
DIP settings: 1-4 OFF
DIP settings:
1,2 ON; 3,4 OFF
+24VDC
59.1
24
FG
relay
1
23
FG
relay
2
R8
R10
Metreel System
Emergency Stop
Contact. NO
+24VDC
52.2
PLC Relay 3
Rack 0
Slot 4
SM 323
SIEMENS
DI8/DO8 x DC 24V/0,5A
I 0.0
.1
.2
.3
.4
.5
.6
.7
1M
2L+
Q0.0
.1
.2
.3
.4
.5
.6
.7
2M
100.1
A36
T > 40
100.2
Emergency Stop input
100.3
A34
T > 50
Min OIL
101.1
Enable Input
purple
101.2
C7
PG13 - 20 Bar
pressure switch
101.3
Connected to Maint. Box
102.1
102.2
17.1
+24VDC
50.1
103.1
103.2
103.3
104.1
Traction Pump Relay
104.2
Airpad Pump Relay
104.3
A7
SG41
105.1
A1
SG13 BJ Lower
105.2
Blocking Jack Pump Relay
17.2
6ES7 323-1BH01-0AA0
Terminal Strip 2
Maintenance Box
Mounted to rack
Terminal Strip 2
Connectivty Box 2
Mounted C-side Truck
Contacts 1-2 NC Depressing HMI stop opens contacts
Contacts 7-8 NO. Close when HIM is plugged in.
Contacts 10-11 NO HMI Enable button
+24VDC
10.2
16.2
Connectivty Box 1
Terminal Strip 1
Connectivty Box 2
Terminal Strip 1
229.3
229.3
Hydrosystem Start
E21
Airpad Proportional
Valve Enable
17.1
PLC Relay 1

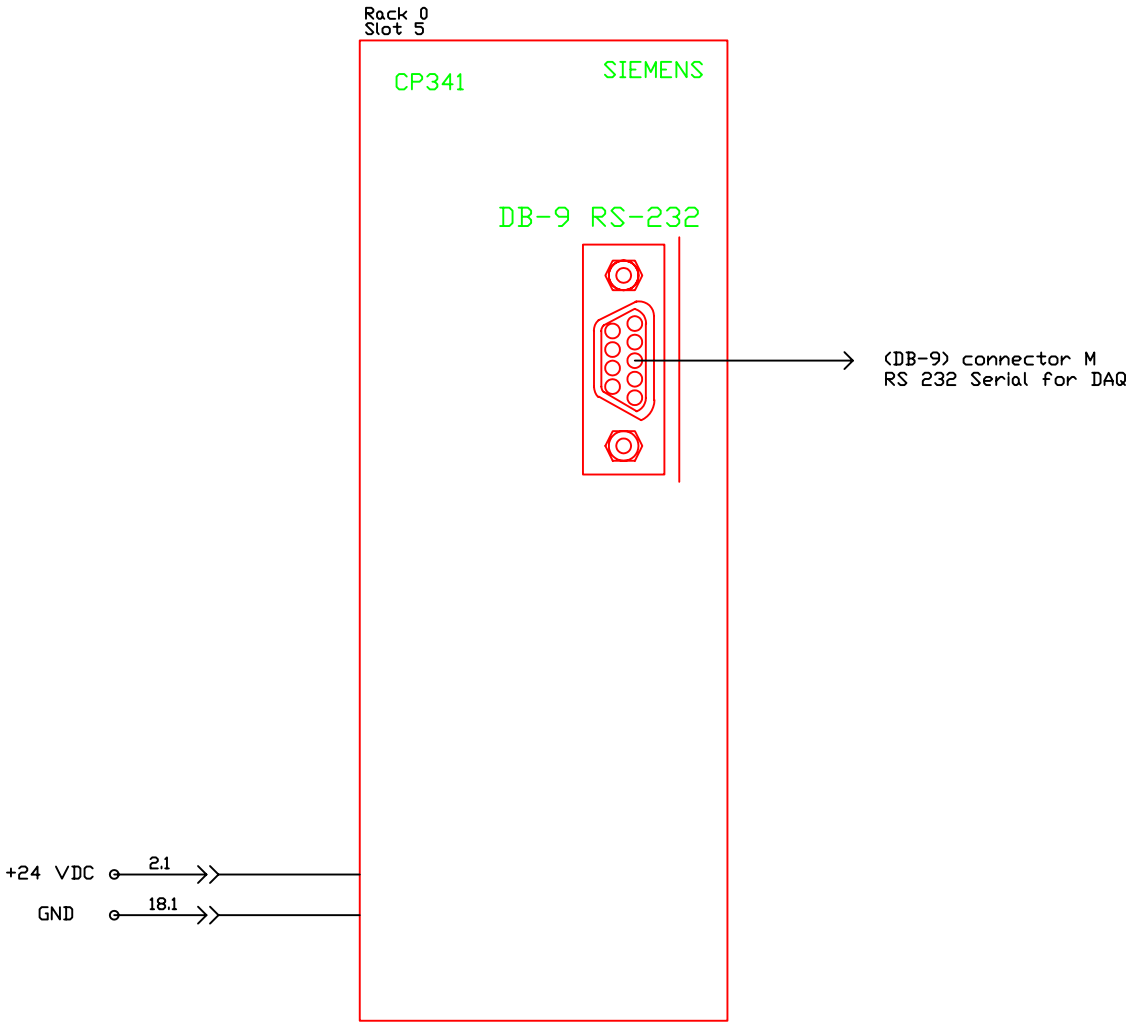
Rack 0
Slot 5
CP341
SIEMENS
DB-9 RS-232
(DB-9) connector M
RS 232 Serial for DAQ
+24 VDC
2.1
GND
18.1

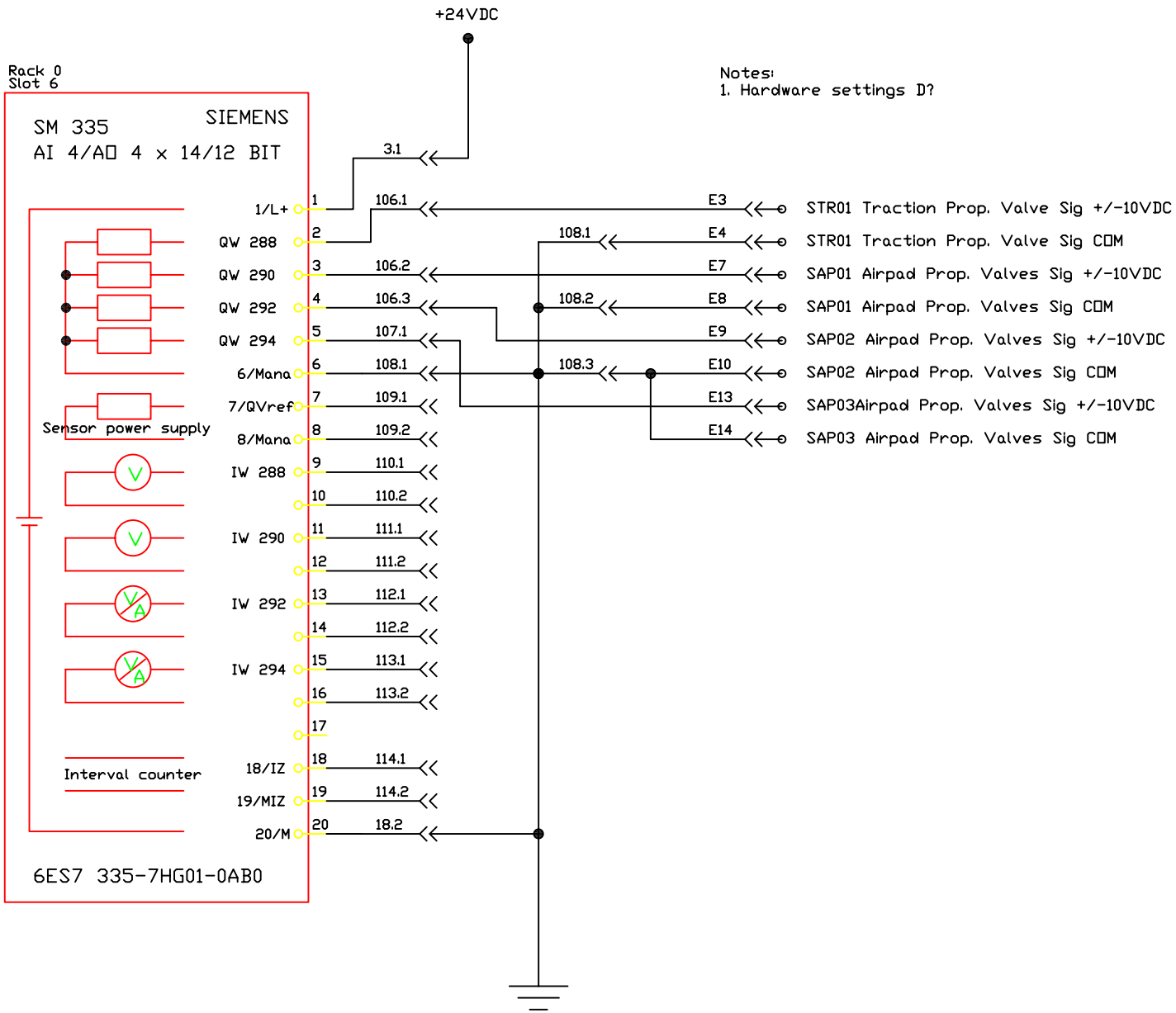
+24VDC
Rack 0
Slot 6
SM 335
SIEMENS
AI 4/AO 4 x 14/12 BIT
Notes:
1. Hardware settings D?
3.1
1/L+
QW 288
QW 290
QW 292
QW 294
6/Mana
7/QVref
8/Mana
IW 288
IW 290
IW 292
IW 294
18/IZ
19/MIZ
20/M
Sensor power supply
Interval counter
6ES7 335-7HG01-0AB0
106.1
106.2
106.3
107.1
108.1
109.1
109.2
110.1
110.2
111.1
111.2
112.1
112.2
113.1
113.2
114.1
114.2
18.2
108.1
108.2
108.3
E3
E4
E7
E8
E9
E10
E13
E14
STR01 Traction Prop. Valve Sig +/-10VDC
STR01 Traction Prop. Valve Sig COM
SAP01 Airpad Prop. Valves Sig +/-10VDC
SAP01 Airpad Prop. Valves Sig COM
SAP02 Airpad Prop. Valves Sig +/-10VDC
SAP02 Airpad Prop. Valves Sig COM
SAP03Airpad Prop. Valves Sig +/-10VDC
SAP03 Airpad Prop. Valves Sig COM

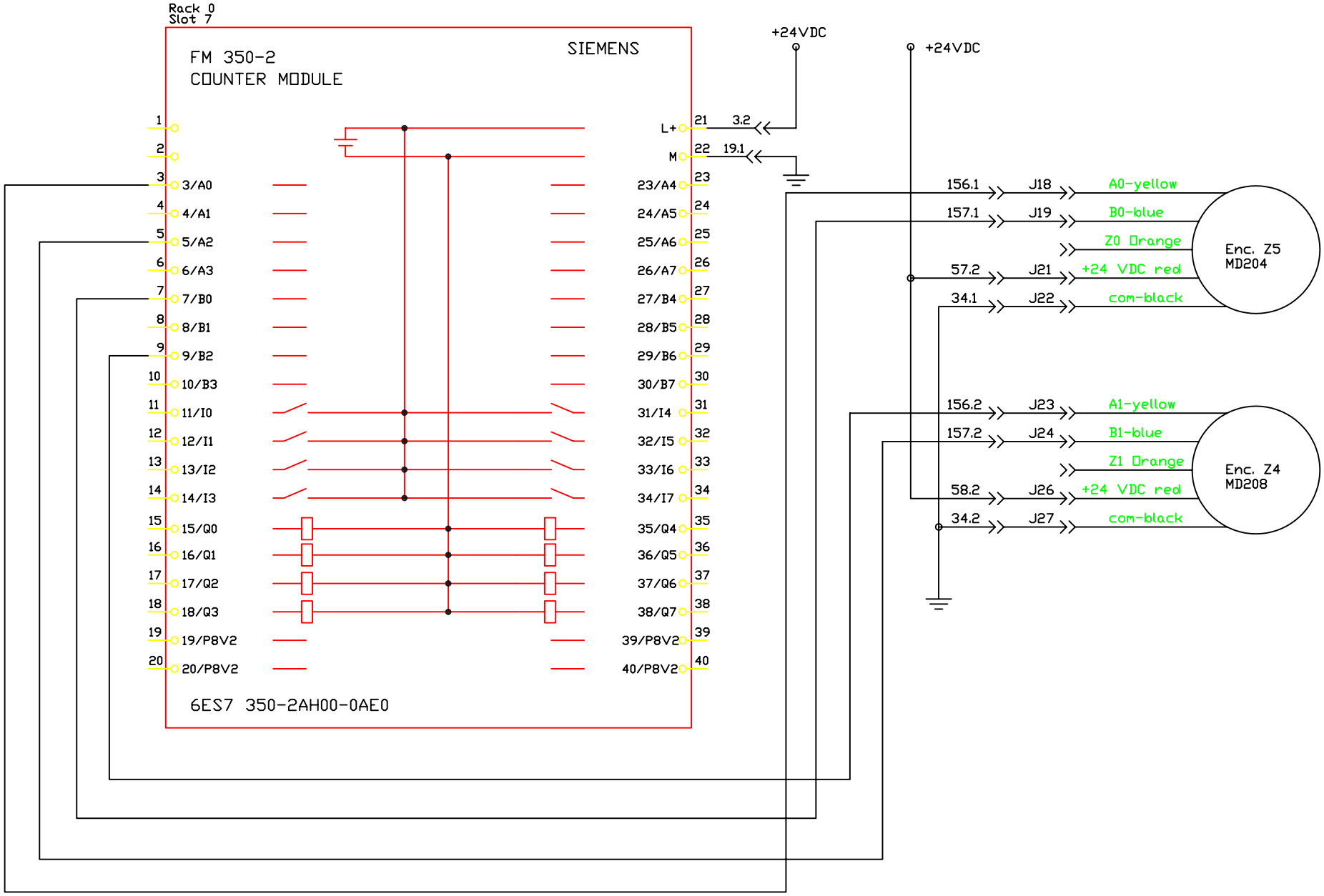
Rack 0
Slot 7
FM 350-2
COUNTER MODULE
SIEMENS
6ES7 350-2AH00-0AE0
+24VDC
+24VDC
L+
M
3.2
19.1
3/A0
4/A1
5/A2
6/A3
7/B0
8/B1
9/B2
10/B3
11/I0
12/I1
13/I2
14/I3
15/Q0
16/Q1
17/Q2
18/Q3
19/P8V2
20/P8V2
23/A4
24/A5
25/A6
26/A7
27/B4
28/B5
29/B6
30/B7
31/I4
32/I5
33/I6
34/I7
35/Q4
36/Q5
37/Q6
38/Q7
39/P8V2
40/P8V2
156.1
J18
A0-yellow
157.1
J19
B0-blue
Z0 Orange
57.2
J21
+24 VDC red
34.1
J22
com-black
Enc. Z5
MD204
156.2
J23
A1-yellow
157.2
J24
B1-blue
Z1 Orange
58.2
J26
+24 VDC red
34.2
J27
com-black
Enc. Z4
MD208

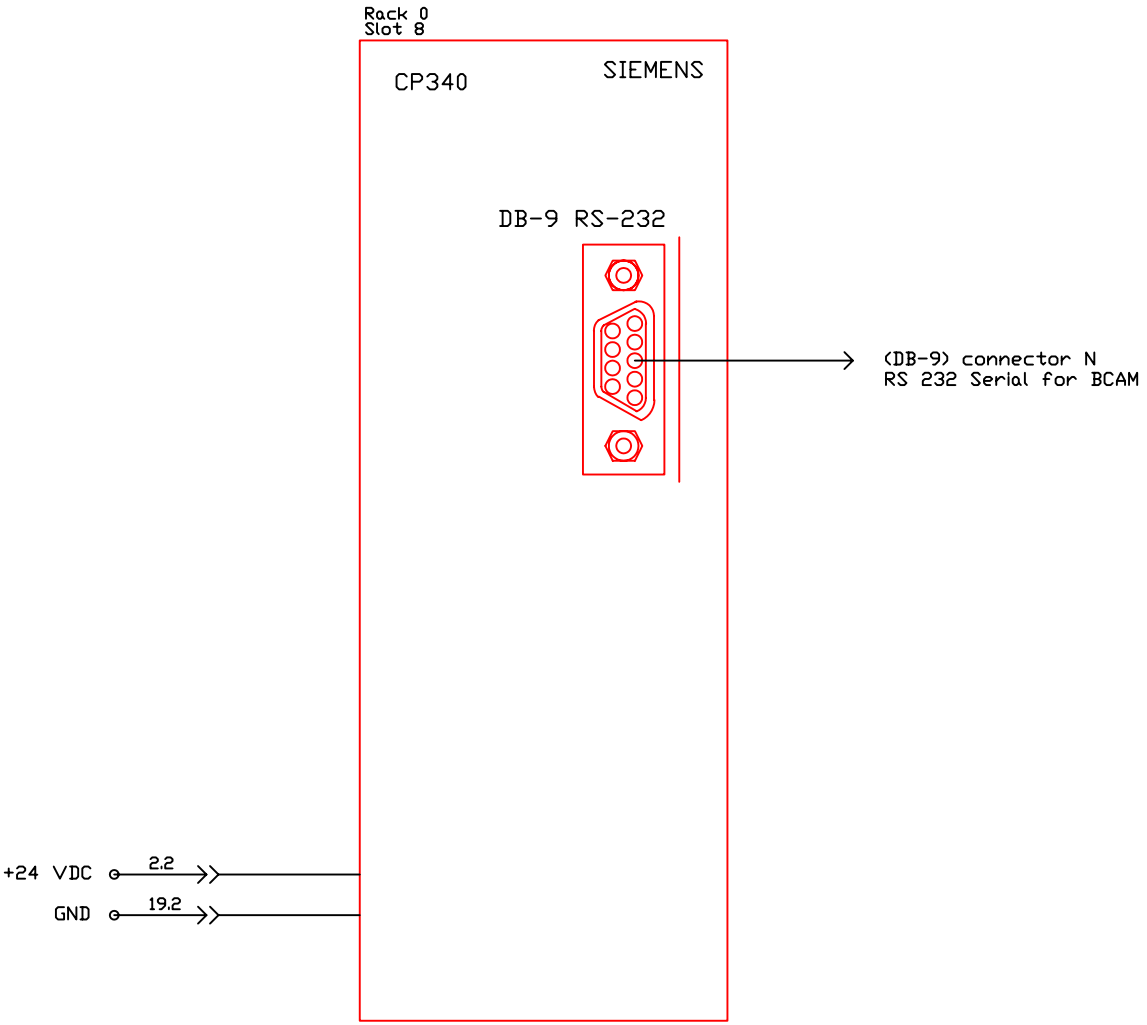
Rack 0
Slot 8
CP340
SIEMENS
DB-9 RS-232
(DB-9) connector N
RS 232 Serial for BCAM
+24 VDC
2.2
GND
19.2

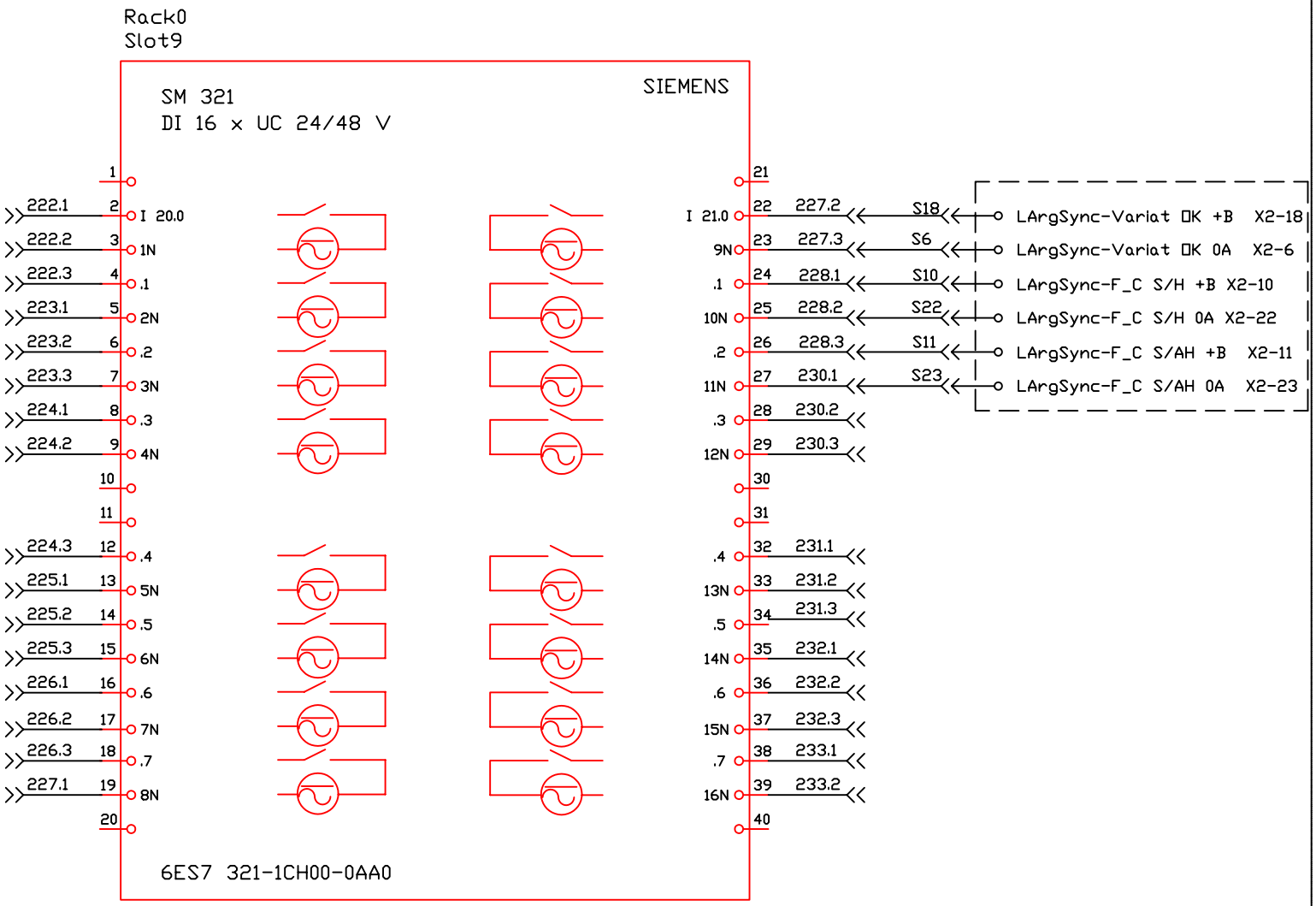
Rack0
Slot9
SM 321
DI 16 x UC 24/48 V
SIEMENS
6ES7 321-1CH00-0AA0
222.1
222.2
222.3
223.1
223.2
223.3
224.1
224.2
224.3
225.1
225.2
225.3
226.1
226.2
226.3
227.1
I 20.0
1N
.1
2N
.2
3N
.3
4N
.4
5N
.5
6N
.6
7N
.7
8N
I 21.0
9N
.1
10N
.2
11N
.3
12N
.4
13N
.5
14N
.6
15N
.7
16N
227.2
227.3
228.1
228.2
228.3
230.1
230.2
230.3
231.1
231.2
231.3
232.1
232.2
232.3
233.1
233.2
S18
S6
S10
S22
S11
S23
LArgSync-Variat ÖK +B X2-18
LArgSync-Variat ÖK 0A X2-6
LArgSync-F_C S/H +B X2-10
LArgSync-F_C S/H 0A X2-22
LArgSync-F_C S/AH +B X2-11
LArgSync-F_C S/AH 0A X2-23

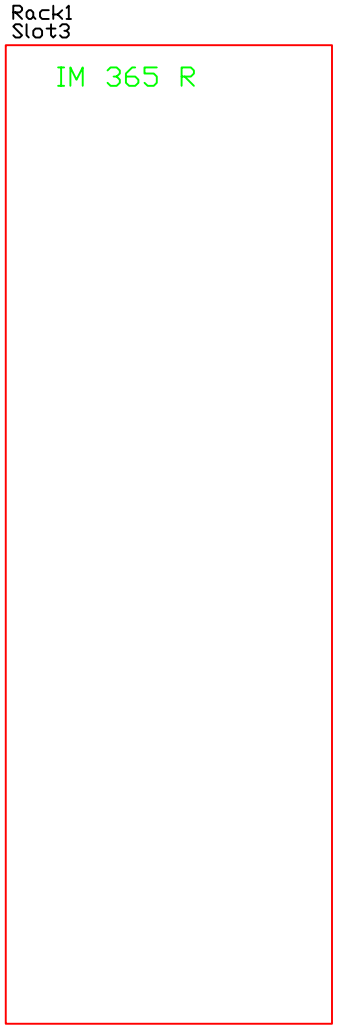
Rack1
Slot3
IM 365 R

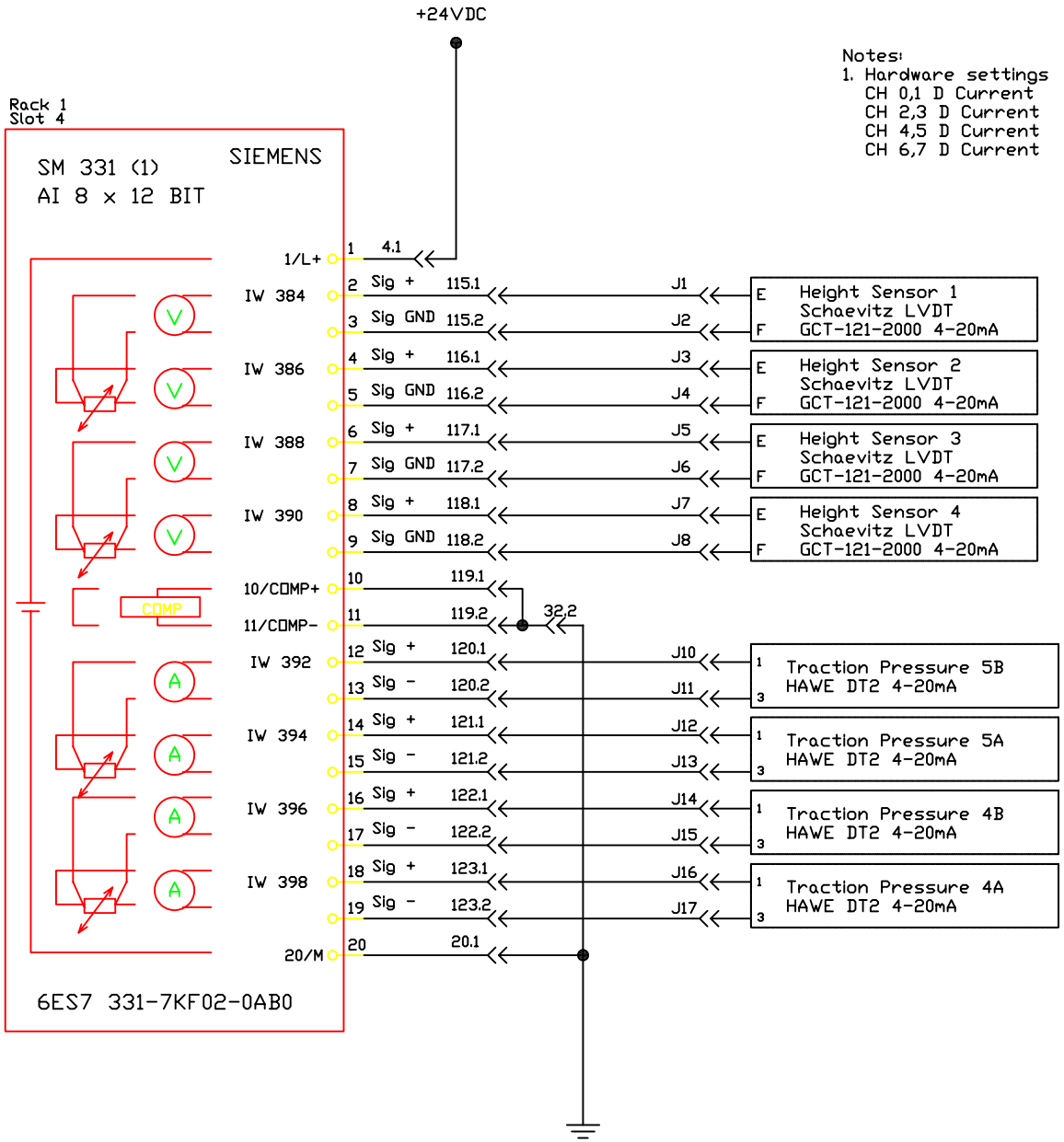
+24VDC
Notes:
1. Hardware settings
CH 0,1 D Current
CH 2,3 D Current
CH 4,5 D Current
CH 6,7 D Current
Rack 1
Slot 4
SM 331 (1)
AI 8 x 12 BIT
SIEMENS
1/L+
IW 384
IW 386
IW 388
IW 390
10/COMP+
11/COMP-
IW 392
IW 394
IW 396
IW 398
20/M
COMP
V
A
1 4.1
2 Sig + 115.1
3 Sig GND 115.2
4 Sig + 116.1
5 Sig GND 116.2
6 Sig + 117.1
7 Sig GND 117.2
8 Sig + 118.1
9 Sig GND 118.2
10 119.1
11 119.2
32.2
12 Sig + 120.1
13 Sig - 120.2
14 Sig + 121.1
15 Sig - 121.2
16 Sig + 122.1
17 Sig - 122.2
18 Sig + 123.1
19 Sig - 123.2
20 20.1
J1
J2
J3
J4
J5
J6
J7
J8
J10
J11
J12
J13
J14
J15
J16
J17
E
F
Height Sensor 1
Schaevitz LVDT
GCT-121-2000 4-20mA
Height Sensor 2
Schaevitz LVDT
GCT-121-2000 4-20mA
Height Sensor 3
Schaevitz LVDT
GCT-121-2000 4-20mA
Height Sensor 4
Schaevitz LVDT
GCT-121-2000 4-20mA
1
3
Traction Pressure 5B
HAWE DT2 4-20mA
Traction Pressure 5A
HAWE DT2 4-20mA
Traction Pressure 4B
HAWE DT2 4-20mA
Traction Pressure 4A
HAWE DT2 4-20mA
6ES7 331-7KF02-0AB0

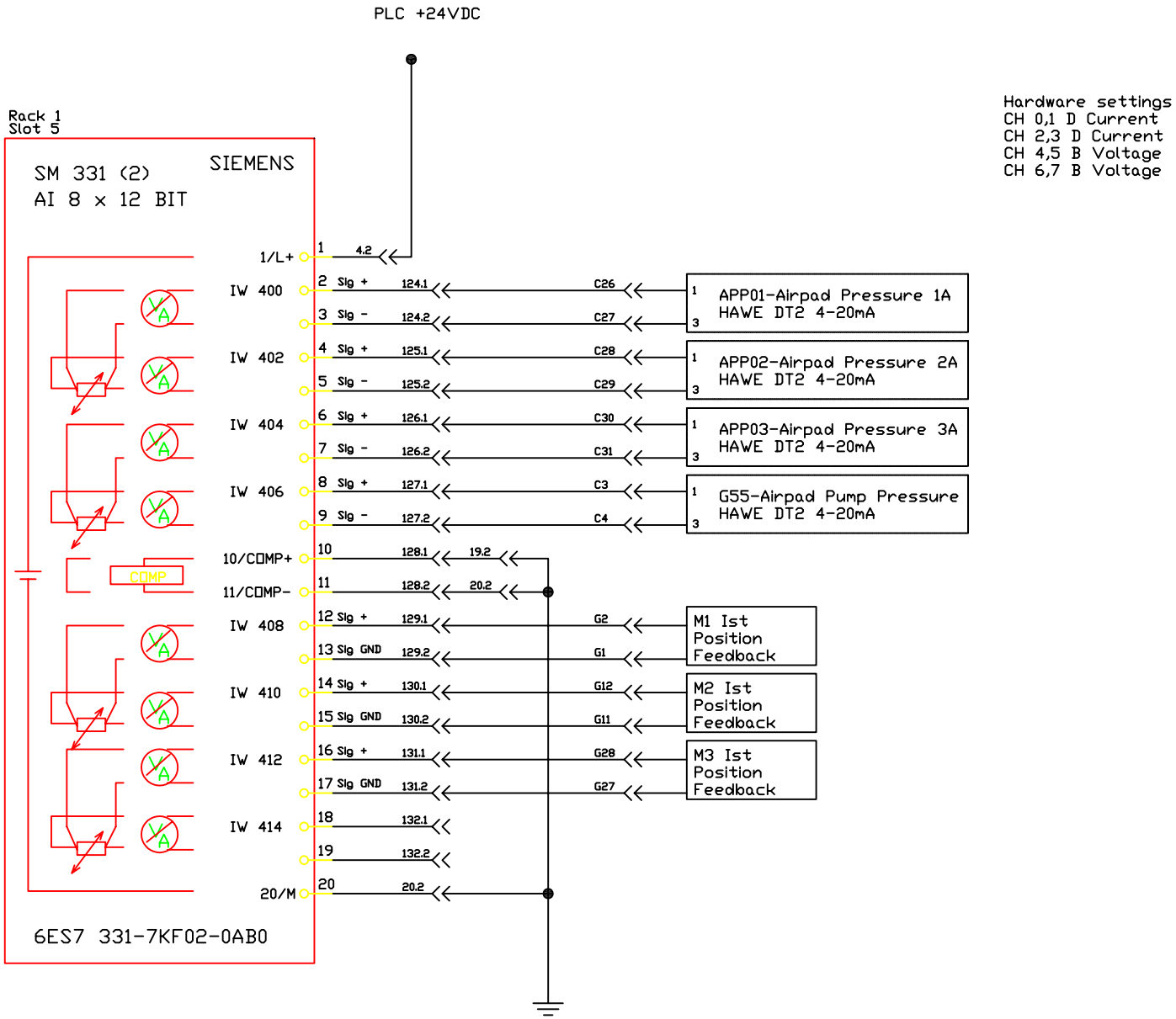
PLC +24VDC
Rack 1
Slot 5
SM 331 (2)
AI 8 x 12 BIT
SIEMENS
6ES7 331-7KF02-0AB0
1/L+
IW 400
IW 402
IW 404
IW 406
10/COMP+
11/COMP-
IW 408
IW 410
IW 412
IW 414
20/M
COMP
Sig +
Sig -
Sig GND
4.2
124.1
124.2
125.1
125.2
126.1
126.2
127.1
127.2
128.1
128.2
129.1
129.2
130.1
130.2
131.1
131.2
132.1
132.2
19.2
20.2
C26
C27
C28
C29
C30
C31
C3
C4
G2
G1
G12
G11
G28
G27
APP01-Airpad Pressure 1A
HAWE DT2 4-20mA
APP02-Airpad Pressure 2A
HAWE DT2 4-20mA
APP03-Airpad Pressure 3A
HAWE DT2 4-20mA
G55-Airpad Pump Pressure
HAWE DT2 4-20mA
M1 Ist
Position
Feedback
M2 Ist
Position
Feedback
M3 Ist
Position
Feedback
Hardware settings
CH 0,1 D Current
CH 2,3 D Current
CH 4,5 B Voltage
CH 6,7 B Voltage

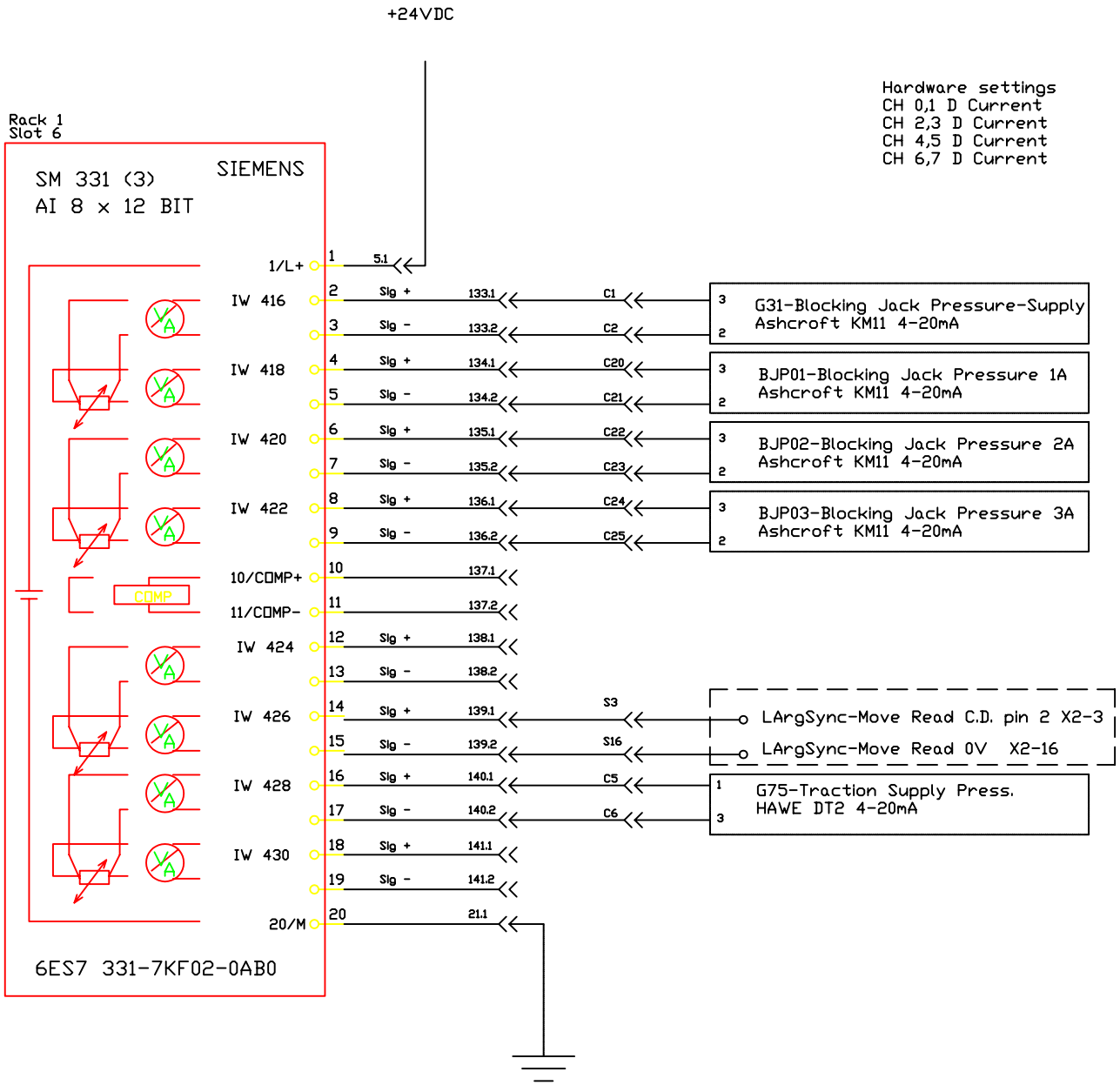
+24VDC
Hardware settings
CH 0,1 D Current
CH 2,3 D Current
CH 4,5 D Current
CH 6,7 D Current
Rack 1
Slot 6
SM 331 (3)
AI 8 x 12 BIT
SIEMENS
1/L+
IW 416
IW 418
IW 420
IW 422
10/COMP+
11/COMP-
IW 424
IW 426
IW 428
IW 430
20/M
COMP
6ES7 331-7KF02-0AB0
G31-Blocking Jack Pressure-Supply
Ashcroft KM11 4-20mA
BJP01-Blocking Jack Pressure 1A
Ashcroft KM11 4-20mA
BJP02-Blocking Jack Pressure 2A
Ashcroft KM11 4-20mA
BJP03-Blocking Jack Pressure 3A
Ashcroft KM11 4-20mA
LArgSync-Move Read C.D. pin 2 X2-3
LArgSync-Move Read 0V X2-16
G75-Traction Supply Press.
HAWE DT2 4-20mA

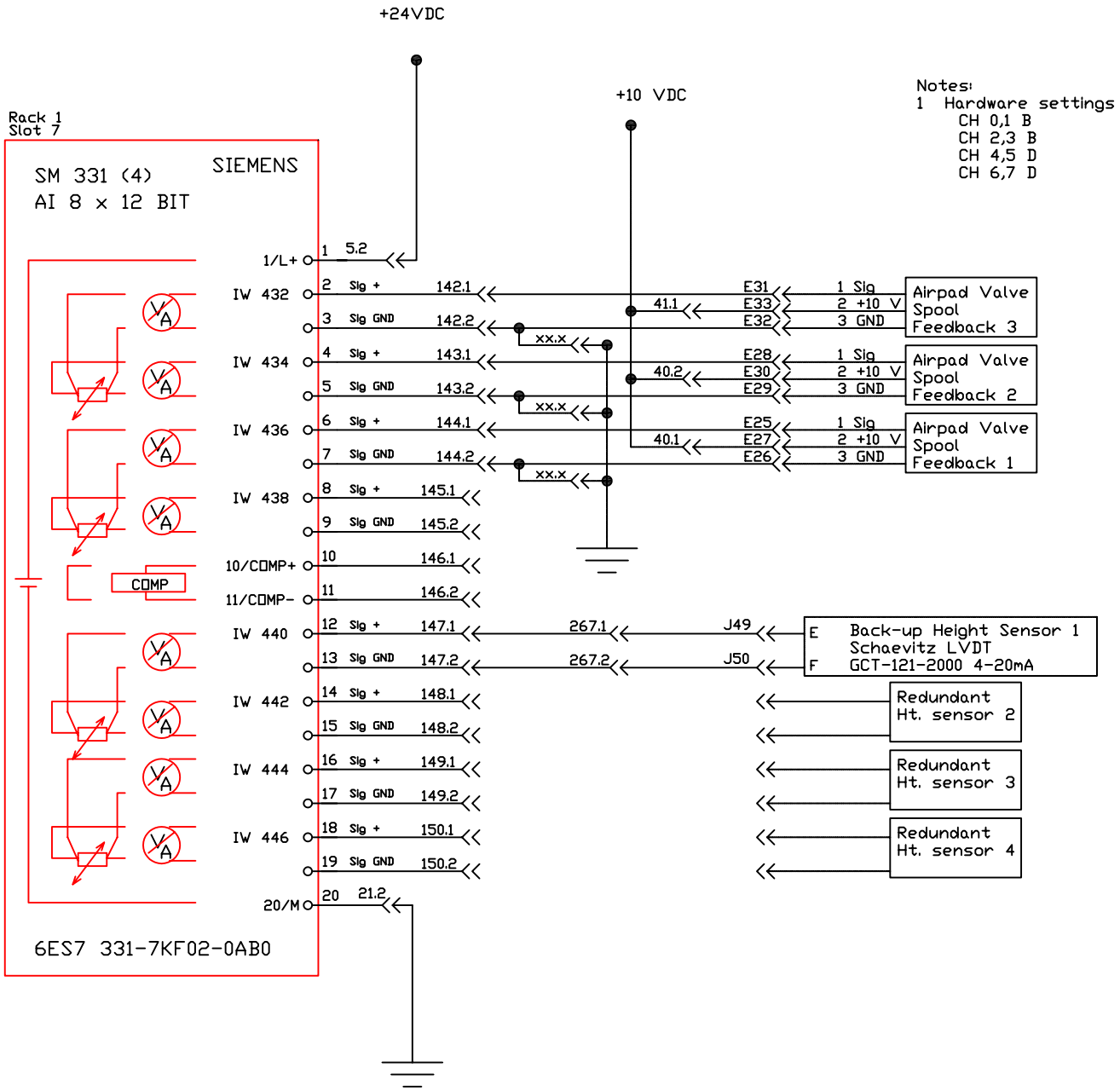
+24VDC
+10 VDC
Notes:
1 Hardware settings
CH 0,1 B
CH 2,3 B
CH 4,5 D
CH 6,7 D
Rack 1
Slot 7
SM 331 (4)
AI 8 x 12 BIT
SIEMENS
1/L+
IW 432
IW 434
IW 436
IW 438
10/COMP+
11/COMP-
IW 440
IW 442
IW 444
IW 446
20/M
Sig +
Sig GND
COMP
5.2
142.1
142.2
143.1
143.2
144.1
144.2
145.1
145.2
146.1
146.2
147.1
147.2
148.1
148.2
149.1
149.2
150.1
150.2
21.2
xx.x
41.1
40.2
40.1
E31
E33
E32
E28
E30
E29
E25
E27
E26
1 Sig
2 +10 V
3 GND
Airpad Valve Spool Feedback 3
Airpad Valve Spool Feedback 2
Airpad Valve Spool Feedback 1
267.1
267.2
J49
J50
E
F
Back-up Height Sensor 1
Schaevitz LVDT
GCT-121-2000 4-20mA
Redundant Ht. sensor 2
Redundant Ht. sensor 3
Redundant Ht. sensor 4
6ES7 331-7KF02-0AB0

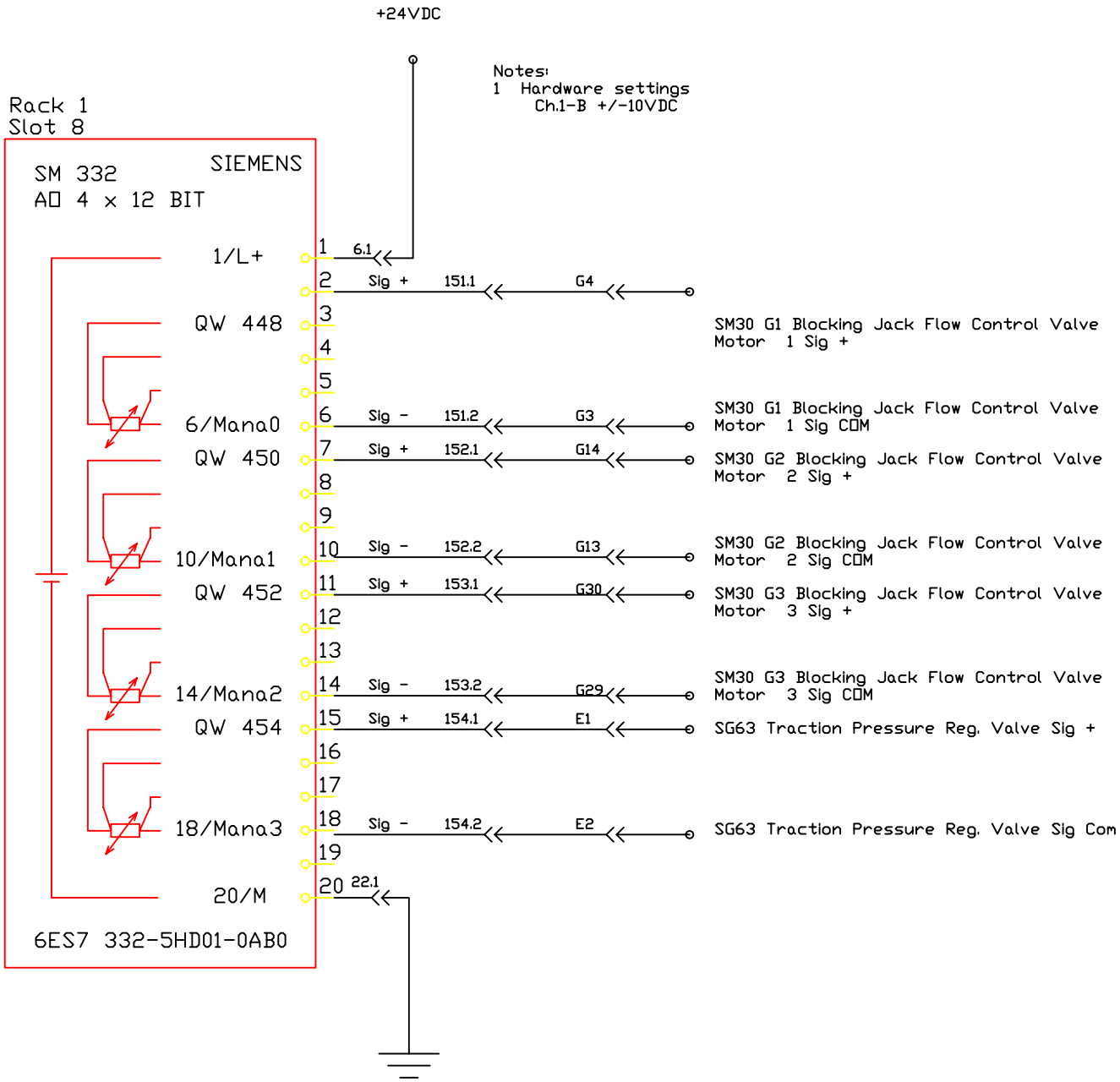
+24VDC
Notes:
1 Hardware settings
Ch.1-B +/-10VDC
Rack 1
Slot 8
SM 332
AO 4 x 12 BIT
SIEMENS
1/L+
QW 448
6/Mana0
QW 450
10/Mana1
QW 452
14/Mana2
QW 454
18/Mana3
20/M
6ES7 332-5HD01-0AB0
1
2
3
4
5
6
7
8
9
10
11
12
13
14
15
16
17
18
19
20
6.1
Sig +
151.1
G4
SM30 G1 Blocking Jack Flow Control Valve Motor 1 Sig +
Sig -
151.2
G3
SM30 G1 Blocking Jack Flow Control Valve Motor 1 Sig COM
Sig +
152.1
G14
SM30 G2 Blocking Jack Flow Control Valve Motor 2 Sig +
Sig -
152.2
G13
SM30 G2 Blocking Jack Flow Control Valve Motor 2 Sig COM
Sig +
153.1
G30
SM30 G3 Blocking Jack Flow Control Valve Motor 3 Sig +
Sig -
153.2
G29
SM30 G3 Blocking Jack Flow Control Valve Motor 3 Sig COM
Sig +
154.1
E1
SG63 Traction Pressure Reg. Valve Sig +
Sig -
154.2
E2
SG63 Traction Pressure Reg. Valve Sig Com
22.1

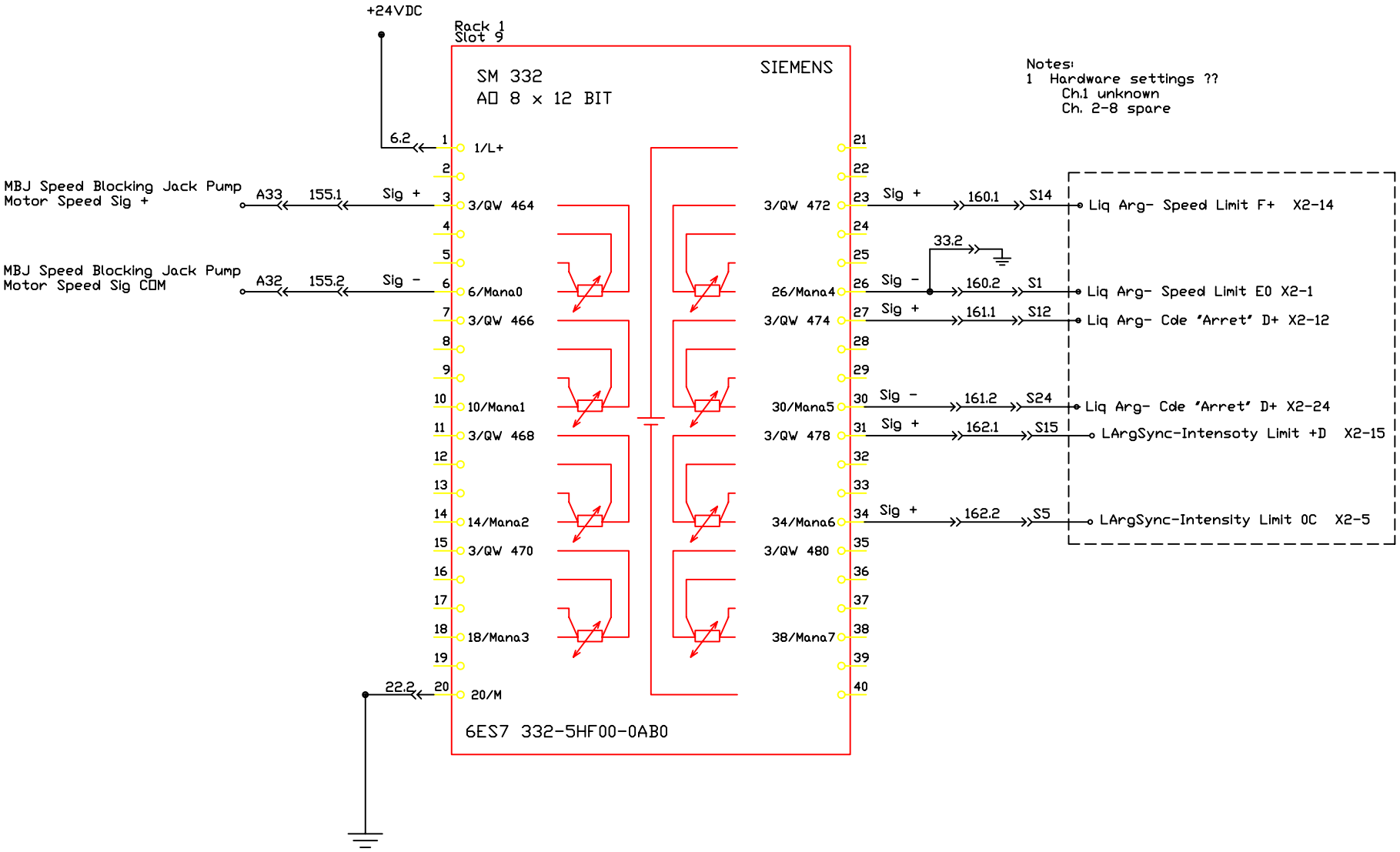
+24VDC
Rack 1
Slot 9
SM 332
AO 8 x 12 BIT
SIEMENS
Notes:
1 Hardware settings ??
Ch.1 unknown
Ch. 2-8 spare
6.2
1/L+
MBJ Speed Blocking Jack Pump
Motor Speed Sig +
A33
155.1
Sig +
3/QW 464
MBJ Speed Blocking Jack Pump
Motor Speed Sig COM
A32
155.2
Sig -
6/Mana0
3/QW 466
10/Mana1
3/QW 468
14/Mana2
3/QW 470
18/Mana3
22.2
20/M
6ES7 332-5HF00-0AB0
3/QW 472
26/Mana4
3/QW 474
30/Mana5
3/QW 478
34/Mana6
3/QW 480
38/Mana7
Sig +
160.1
S14
Liq Arg- Speed Limit F+ X2-14
33.2
Sig -
160.2
S1
Liq Arg- Speed Limit E0 X2-1
Sig +
161.1
S12
Liq Arg- Cde 'Arret' D+ X2-12
Sig -
161.2
S24
Liq Arg- Cde 'Arret' D+ X2-24
Sig +
162.1
S15
LArgSync-Intensoty Limit +D X2-15
Sig +
162.2
S5
LArgSync-Intensity Limit 0C X2-5

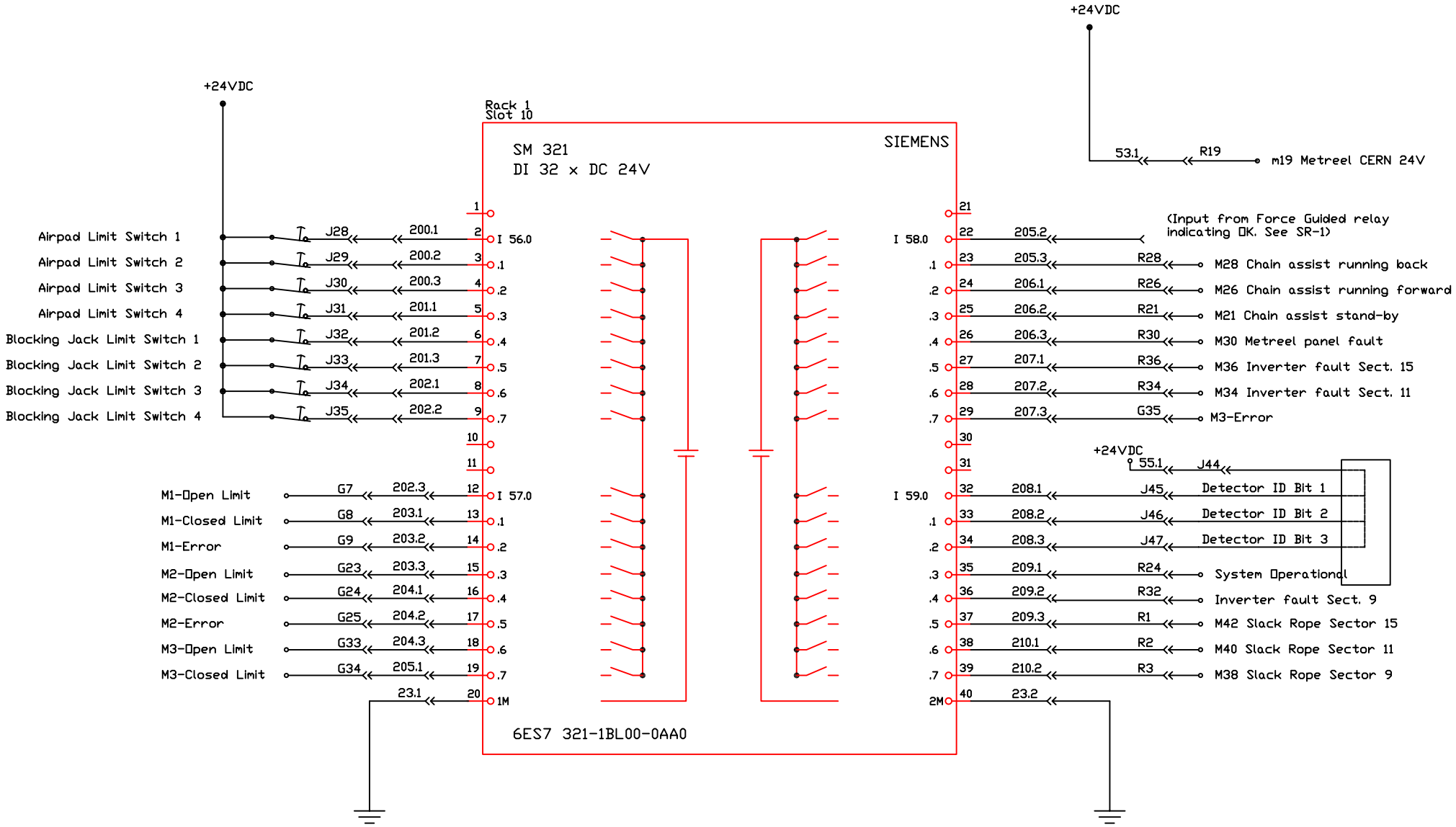

Jumpers in connector from each detector service line uniquely identifies detector by shorting in coming 24VDC back to selected inputs.

Note that Plugling into connection box distinguishes which side is running (A or C).

Rev. 6 - Decmber 14, 2006

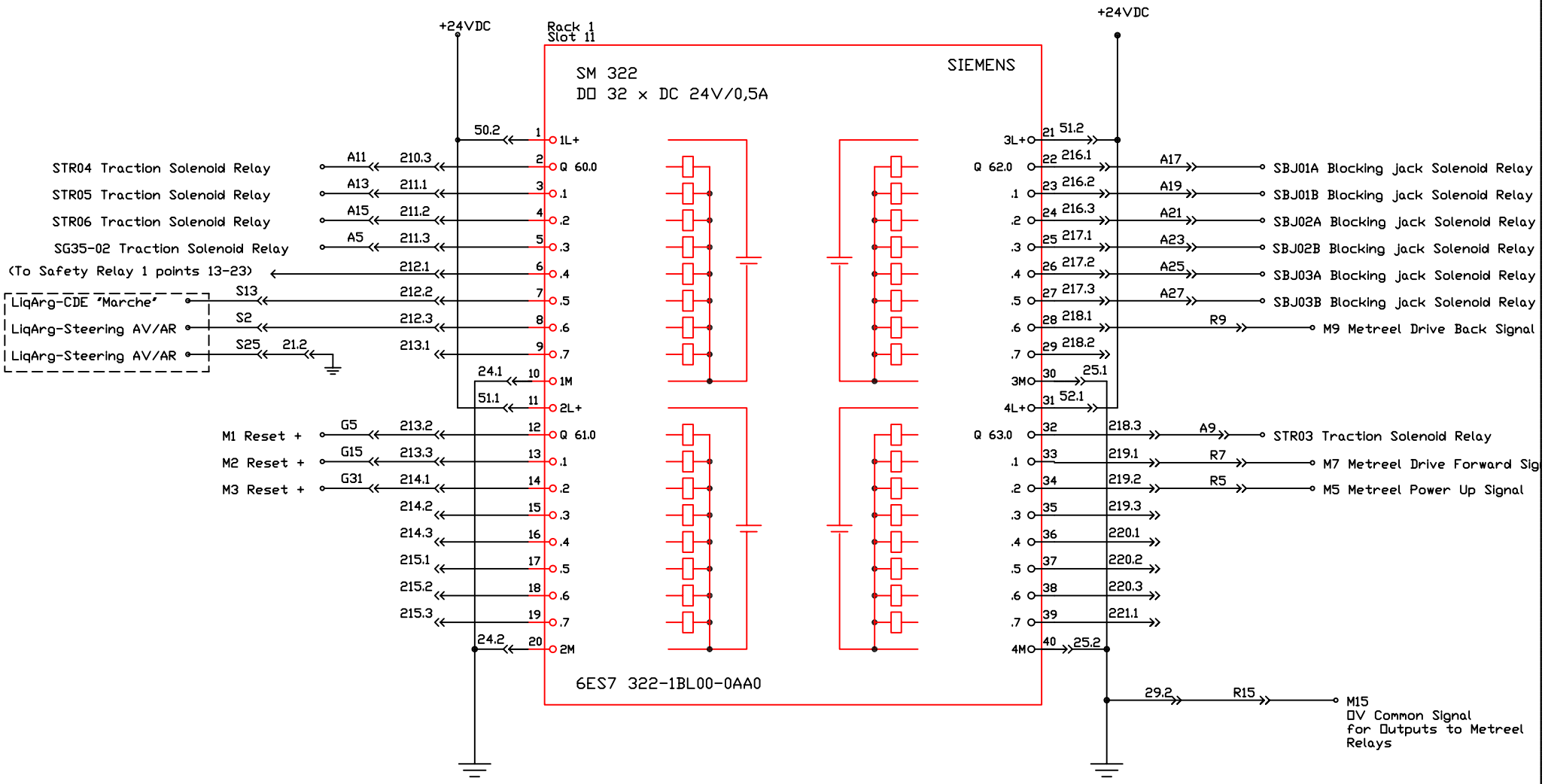
+24VDC
Rack 1
Slot 11
SM 322
DO 32 x DC 24V/0,5A
SIEMENS
6ES7 322-1BL00-0AA0
STR04 Traction Solenoid Relay
STR05 Traction Solenoid Relay
STR06 Traction Solenoid Relay
SG35-02 Traction Solenoid Relay
(To Safety Relay 1 points 13-23)
LiqArg-CDE "Marche"
LiqArg-Steering AV/AR
LiqArg-Steering AV/AR
M1 Reset +
M2 Reset +
M3 Reset +
SBJ01A Blocking jack Solenoid Relay
SBJ01B Blocking jack Solenoid Relay
SBJ02A Blocking jack Solenoid Relay
SBJ02B Blocking jack Solenoid Relay
SBJ03A Blocking jack Solenoid Relay
SBJ03B Blocking jack Solenoid Relay
M9 Metreel Drive Back Signal
STR03 Traction Solenoid Relay
M7 Metreel Drive Forward Sig
M5 Metreel Power Up Signal
M15
0V Common Signal
for Outputs to Metreel
Relays

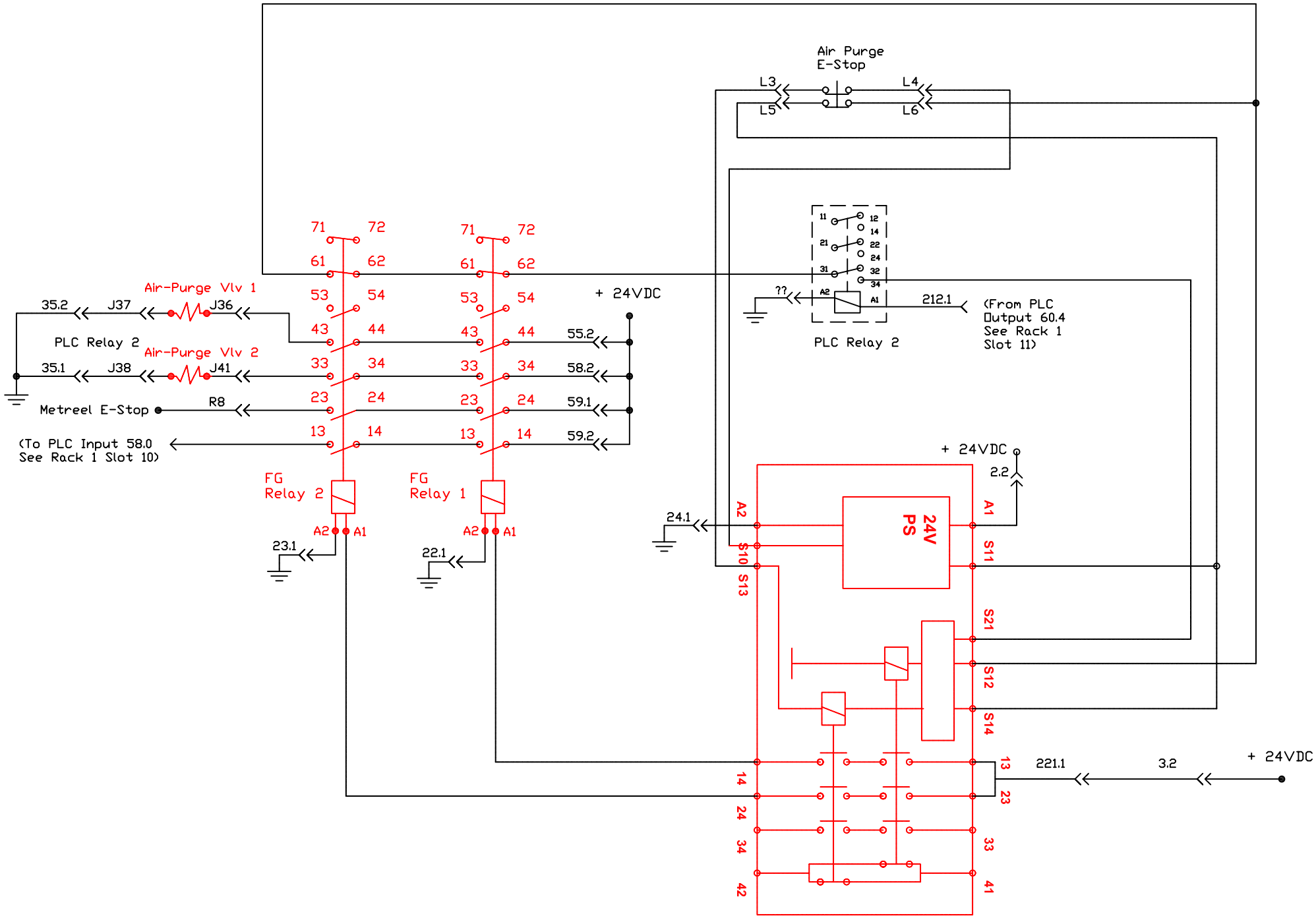
Air Purge
E-Stop
L3
L4
L5
L6
71
72
61
62
53
54
43
44
33
34
23
24
13
14
Air-Purge Vlv 1
Air-Purge Vlv 2
35.2
J37
J36
PLC Relay 2
35.1
J38
J41
Metreel E-Stop
R8
(To PLC Input 58.0
See Rack 1 Slot 10)
+ 24VDC
55.2
58.2
59.1
59.2
FG
Relay 2
FG
Relay 1
A2
A1
23.1
22.1
11
12
14
21
22
24
31
32
34
??
212.1
(From PLC
Output 60.4
See Rack 1
Slot 11)
PLC Relay 2
+ 24VDC
2.2
24.1
24V
PS
A2
A1
S10
S11
S13
S21
S12
S14
13
14
23
24
33
34
41
42
221.1
3.2
+ 24VDC