CHANGES	Date
ALL RES TO 300 OHM	10-8-99
CORRECTED VALUES FOR LAYOUT X3	8-22-00

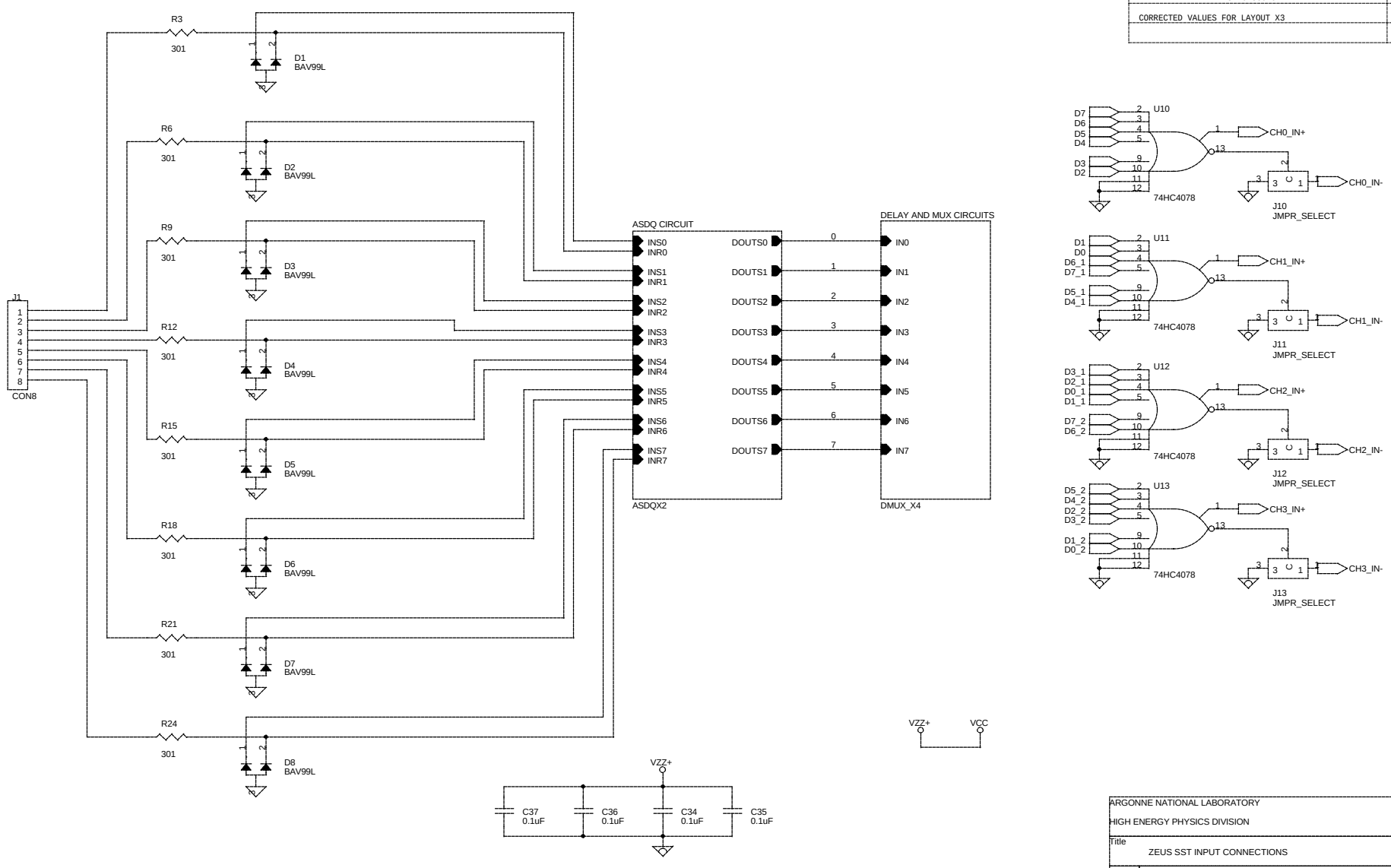

ARGONNE NATIONAL LABORATORY

HIGH ENERGY PHYSICS DIVISION

Title: ZEUS SST INPUT CONNECTIONS

Size	Document Number	Rev
B	MAIN SCHEMATIC	X3

Date: Thursday, August 24, 2000 Sheet 1 of 4

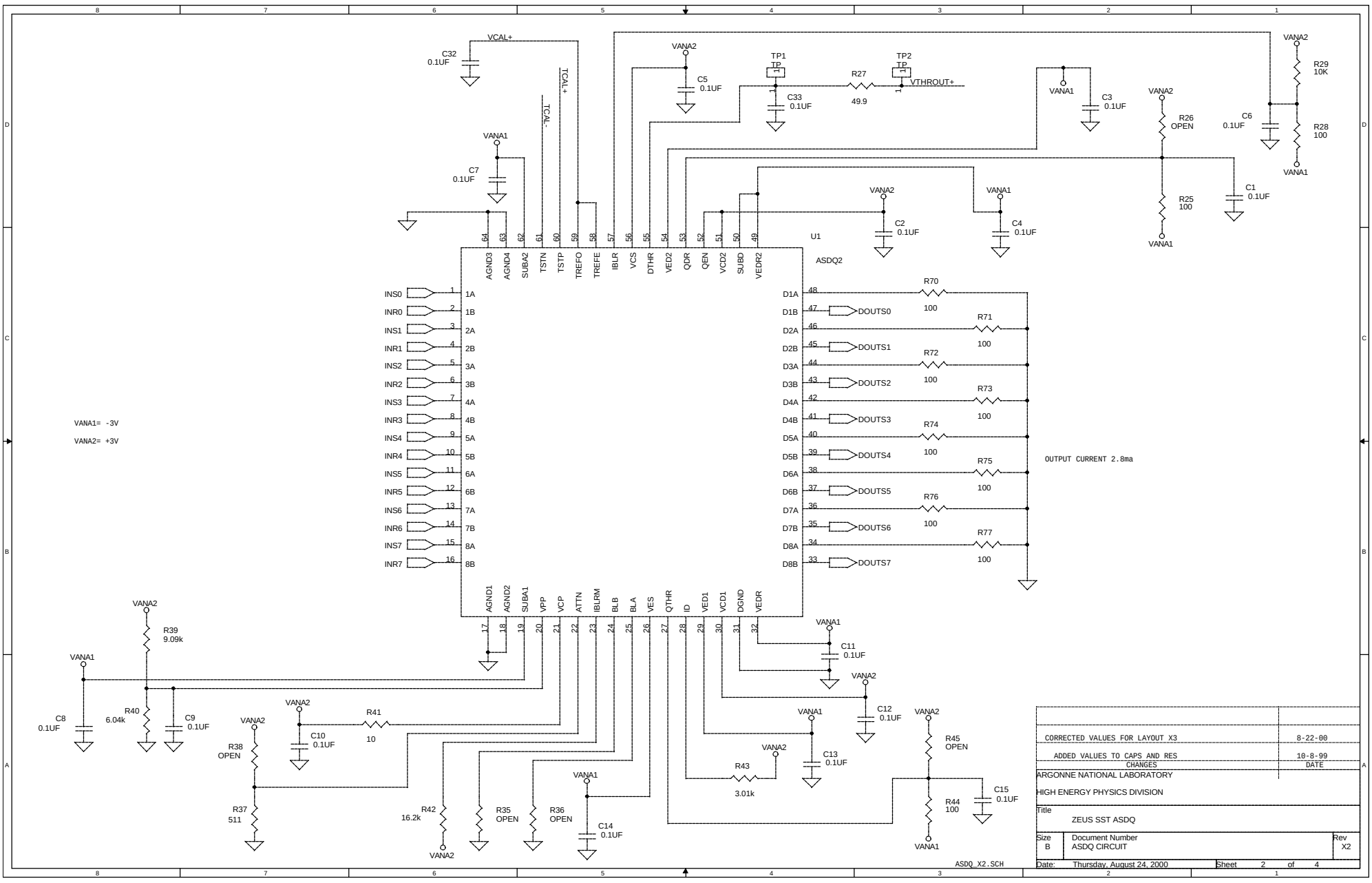

CORRECTED VALUES FOR LAYOUT X3	8-22-00
ADDED VALUES TO CAPS AND RES	10-8-99
CHANGES	DATE

ARGONNE NATIONAL LABORATORY

HIGH ENERGY PHYSICS DIVISION

Title: ZEUS SST ASDQ

Size	Document Number	Rev
B	ASDQ CIRCUIT	X2

Date: Thursday, August 24, 2000 Sheet 2 of 4

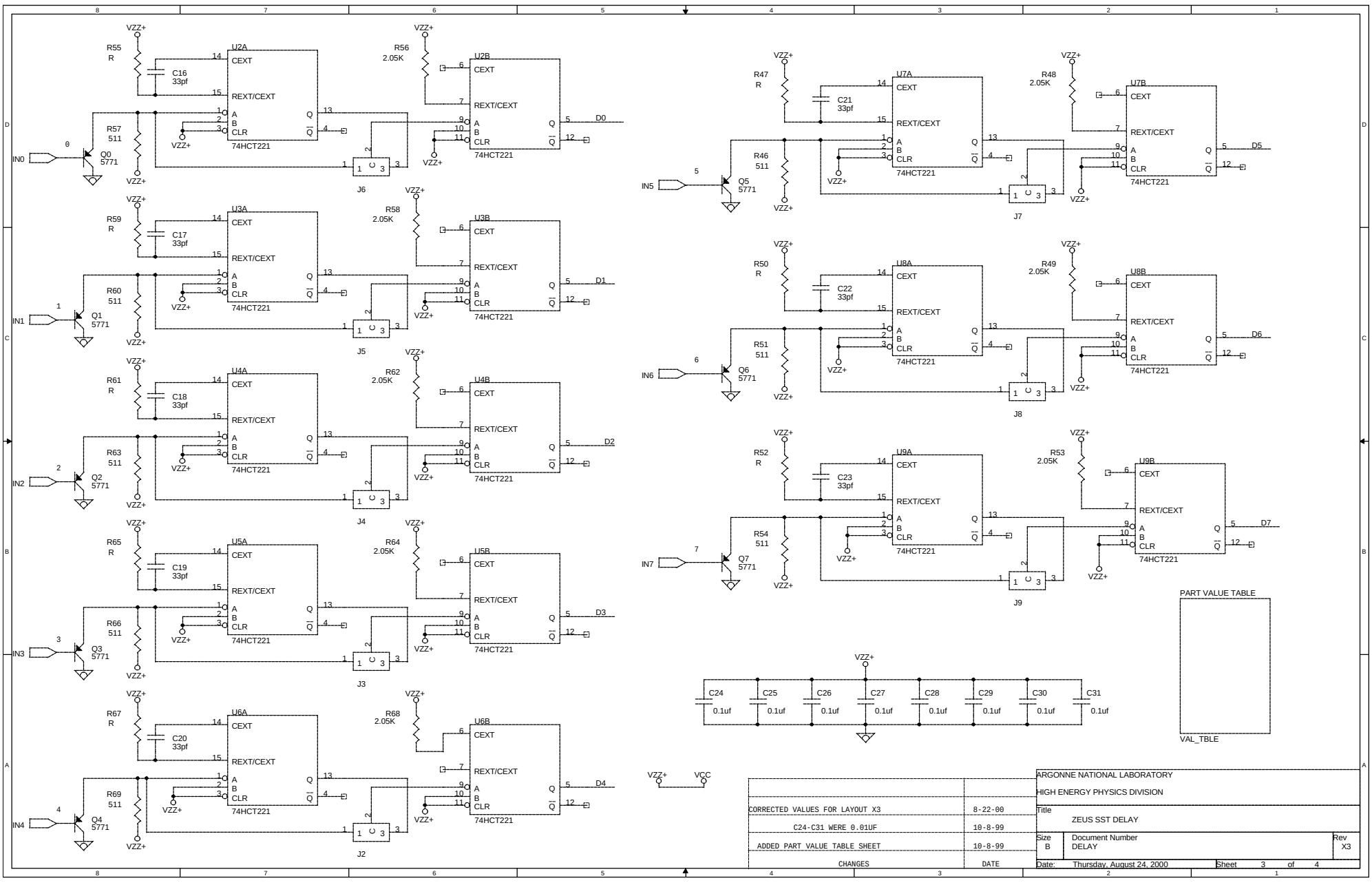

CHANGES	DATE
CORRECTED VALUES FOR LAYOUT X3	8-22-00
C24-C31 WERE 0.01UF	10-8-99
ADDED PART VALUE TABLE SHEET	10-8-99

ARGONNE NATIONAL LABORATORY
HIGH ENERGY PHYSICS DIVISION

Title: ZEUS SST DELAY

Size: B | Document Number: DELAY | Rev: X3

Date: Thursday, August 24, 2000 | Sheet 3 of 4

-	499	2k

SEQUENCE NUMBER	DES.	VALUE
200ns DELAY	R55	2k
	R56	2k
	R57	499
	C16	33pf
	J6	2-3
0 DELAY	R59	-
	R58	-
	R60	-
	C17	-
	J5	1-2
1000ns DELAY	R61	19.6k
	R62	2k
	R63	499
	C18	33pf
	J4	2-3
800ns DELAY	R65	15.4k
	R64	2k
	R66	499
	C19	33pf
	J3	2-3
600ns DELAY	R67	10.7k
	R68	2k
	R69	499
	C20	33pf
	J2	2-3
400ns DELAY	R47	6.19k
	R48	2k
	R46	499
	C21	33pf
	J7	2-3
200ns DELAY	R50	2k
	R49	2k
	R51	499
	C22	33pf
	J8	2-3
0 DELAY	R52	-
	R53	-
	R54	-
	C23	-
	J9	1-2

SEQUENCE NUMBER	DES.	VALUE
600ns DELAY	R55	
	R56	
	R57	
	C16	
	J6	
400ns DELAY	R59	
	R58	
	R60	
	C17	
	J5	
200ns DELAY	R61	
	R62	
	R63	
	C18	
	J4	
0 DELAY	R65	
	R64	
	R66	
	C19	
	J3	
1000ns DELAY	R67	
	R68	
	R69	
	C20	
	J2	
800ns DELAY	R47	
	R48	
	R46	
	C21	
	J7	
600ns DELAY	R50	
	R49	
	R51	
	C22	
	J8	
400ns DELAY	R52	
	R53	
	R54	
	C23	
	J9	

SEQUENCE NUMBER	DES.	VALUE
1000ns DELAY	R55	
	R56	
	R57	
	C16	
	J6	
800ns DELAY	R59	
	R58	
	R60	
	C17	
	J5	
600ns DELAY	R61	
	R62	
	R63	
	C18	
	J4	
400ns DELAY	R65	
	R64	
	R66	
	C19	
	J3	
200ns DELAY	R67	
	R68	
	R69	
	C20	
	J2	
0 DELAY	R47	
	R48	
	R46	
	C21	
	J7	
1000ns DELAY	R50	
	R49	
	R51	
	C22	
	J8	
800ns DELAY	R52	
	R53	
	R54	
	C23	
	J9	

REPEATE THIS SEQUENCE THREE MORE TIMES

ARGONNE NATIONAL LABORATORY

HIGH ENERGY PHYSICS DIVISION

Title
ZEUS SST DELAY TIMING VALUE TABLE

Size B | Document Number TIMING VALUE TABLE | Rev X1

Date: Thursday, August 24, 2000 | Sheet 4 of 4