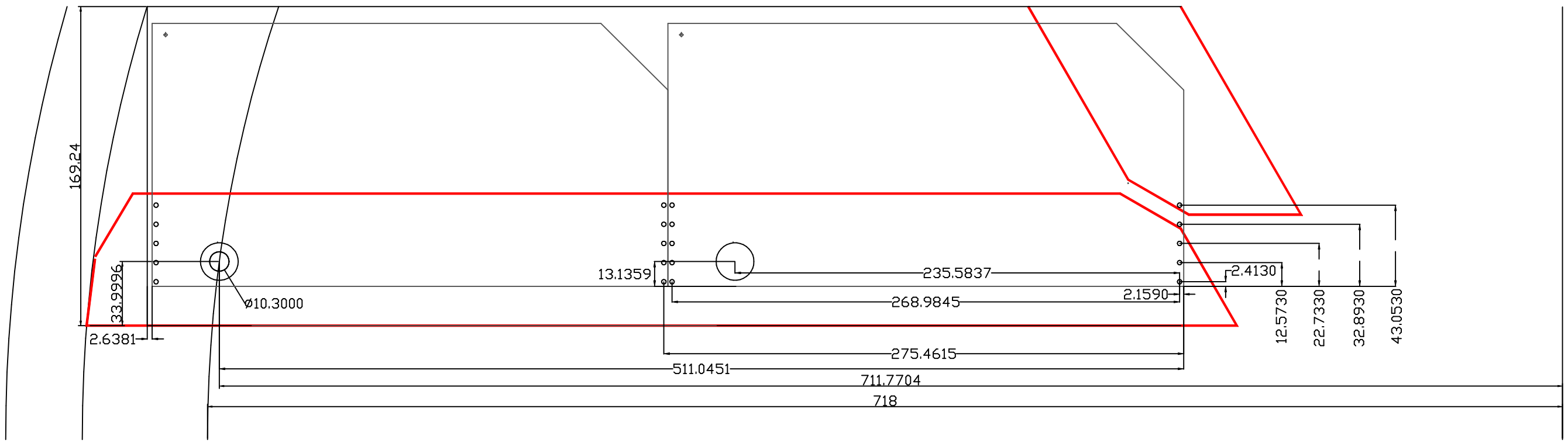
169.24
33.9996
2.6381
ø10.3000
13.1359
235.5837
268.9845
275.4615
511.0451
711.7704
718
2.4130
2.1590
12.5730
22.7330
32.8930
43.0530