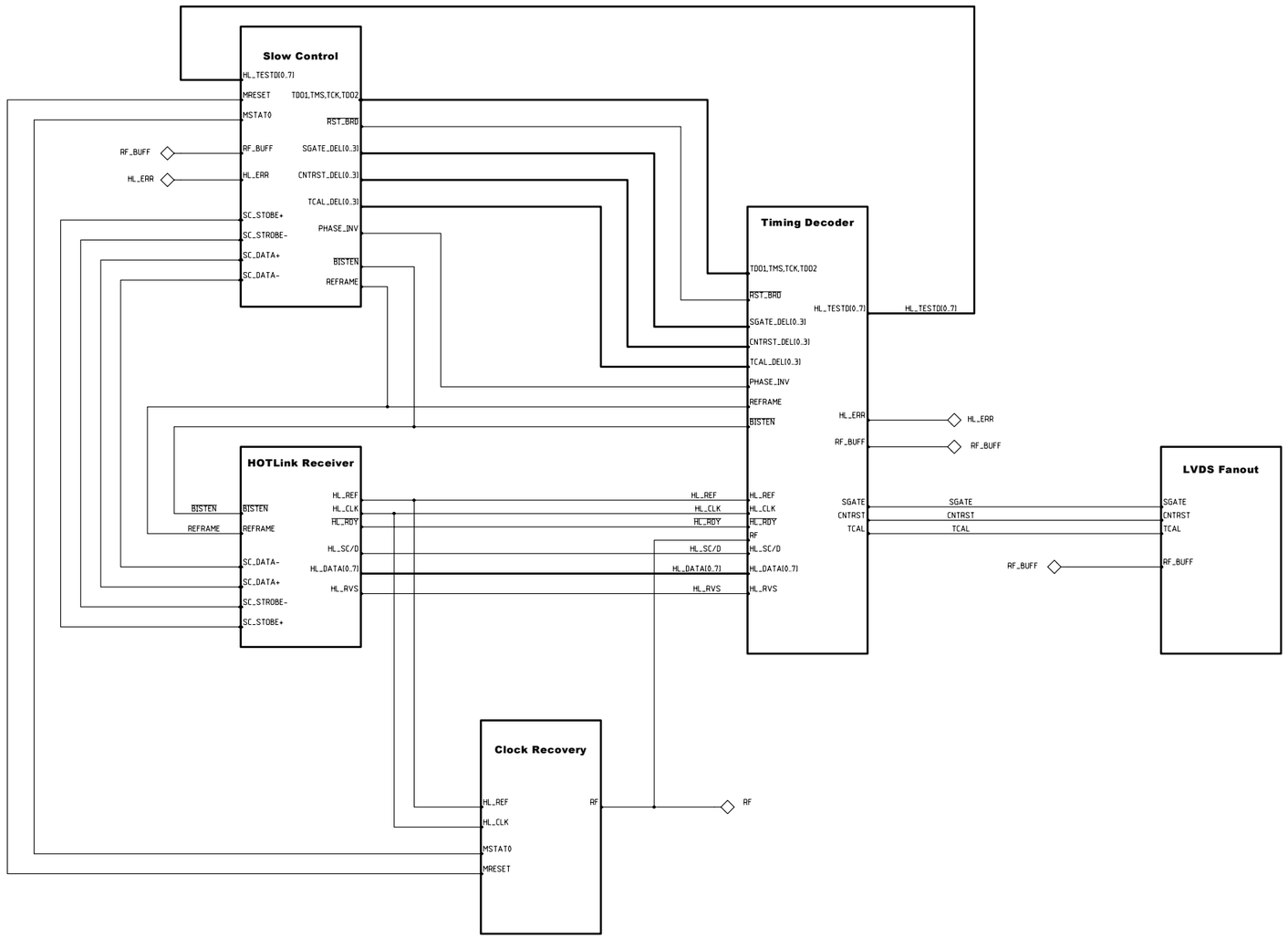

MODIFIED 03:14:36 PM 12/04/2001				
UNLESS OTHERWISE SPECIFIED			ORIGINATOR	Tom Fitzpatrick
FRACTIONS	DECIMALS	ANGLES	DRAWN	Tom Fitzpatrick
			CHECKED	
			APPROVED	

1. BREAK ALL SHARP EDGES 1/64 MAX.
2. DO NOT SCALE DWG.
3. DIMENSIONING IN ACCORD WITH ANSI Y14.5 STD's.

√ MAX. ALL MACHINED SURFACES

USED ON

MATERIAL

Fermi National Accelerator Laboratory
United States Department of Energy

C:\VB_JOBS\mtm\Mtm.prj

MINOS CLOCK SYSTEM
MINDER TIMING MODULE (MTM)
TOP LEVEL HIERARCHY

SIZE	SCALE	FILMED	DRAWING NUMBER	PAGE 01 of 01	REV
D	1:1				A

H=8ND; V=4LA

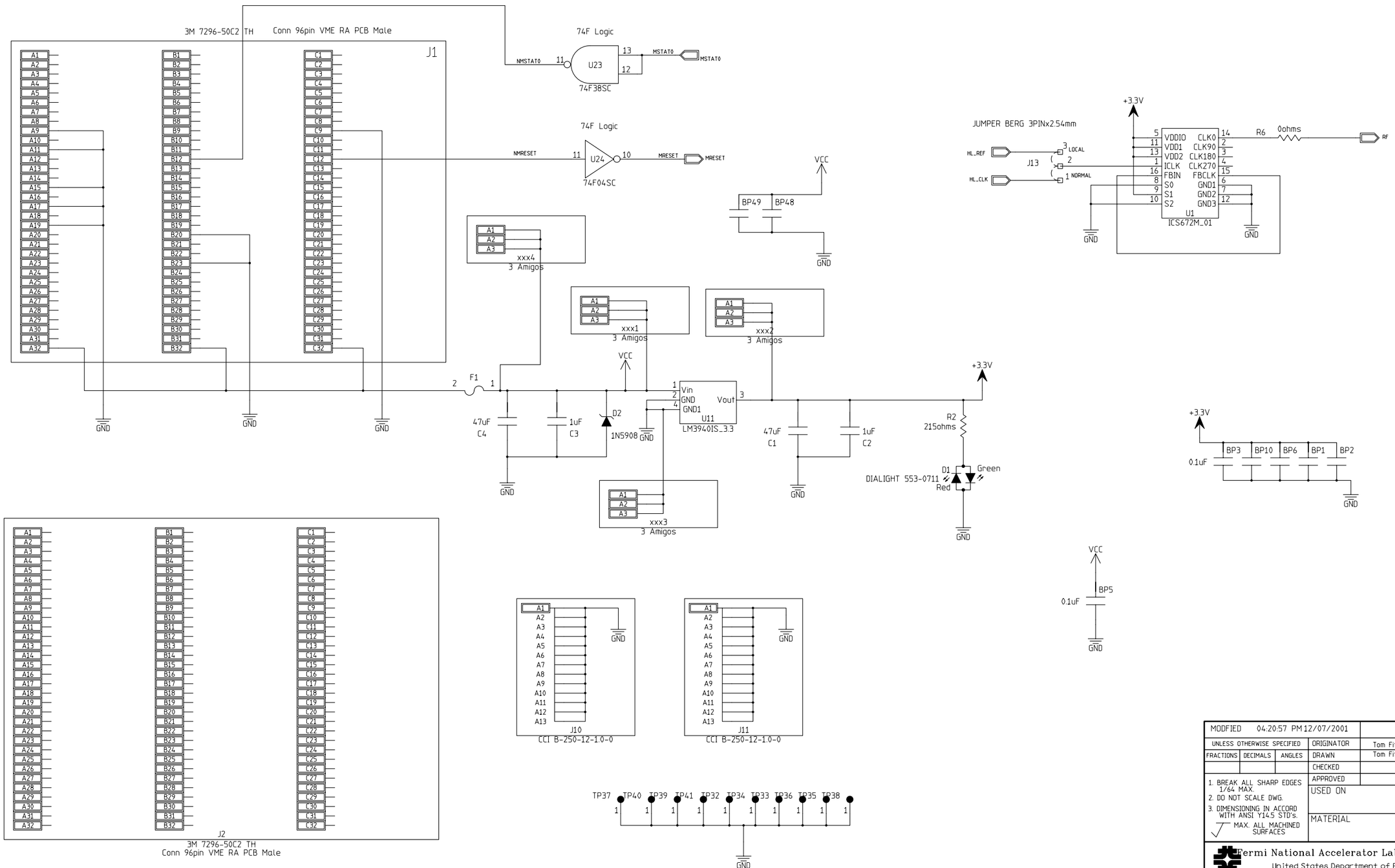

MODIFIED 04:20:57 PM 12/07/2001			
UNLESS OTHERWISE SPECIFIED		ORIGINATOR	Tom Fitzpatrick
FRACTIONS	DECIMALS	ANGLES	DRAWN Tom Fitzpatrick
			CHECKED
			APPROVED

1. BREAK ALL SHARP EDGES 1/64 MAX.
2. DO NOT SCALE DWG.
3. DIMENSIONING IN ACCORD WITH ANSI Y14.5 STD's.

MAX. ALL MACHINED SURFACES

USED ON

MATERIAL

Fermi National Accelerator Laboratory
United States Department of Energy

C:\VB_JOBS\mtm\Mtm.prj

MINOS CLOCK SYSTEM
MINDER TIMING MODULE (MTM)
CLOCK RECOVERY/POWER CONNECTIONS

SIZE	SCALE	FILMED	DRAWING NUMBER	PAGE 01 of 01	REV
D	1:1				A

H=8ND; V=4LA

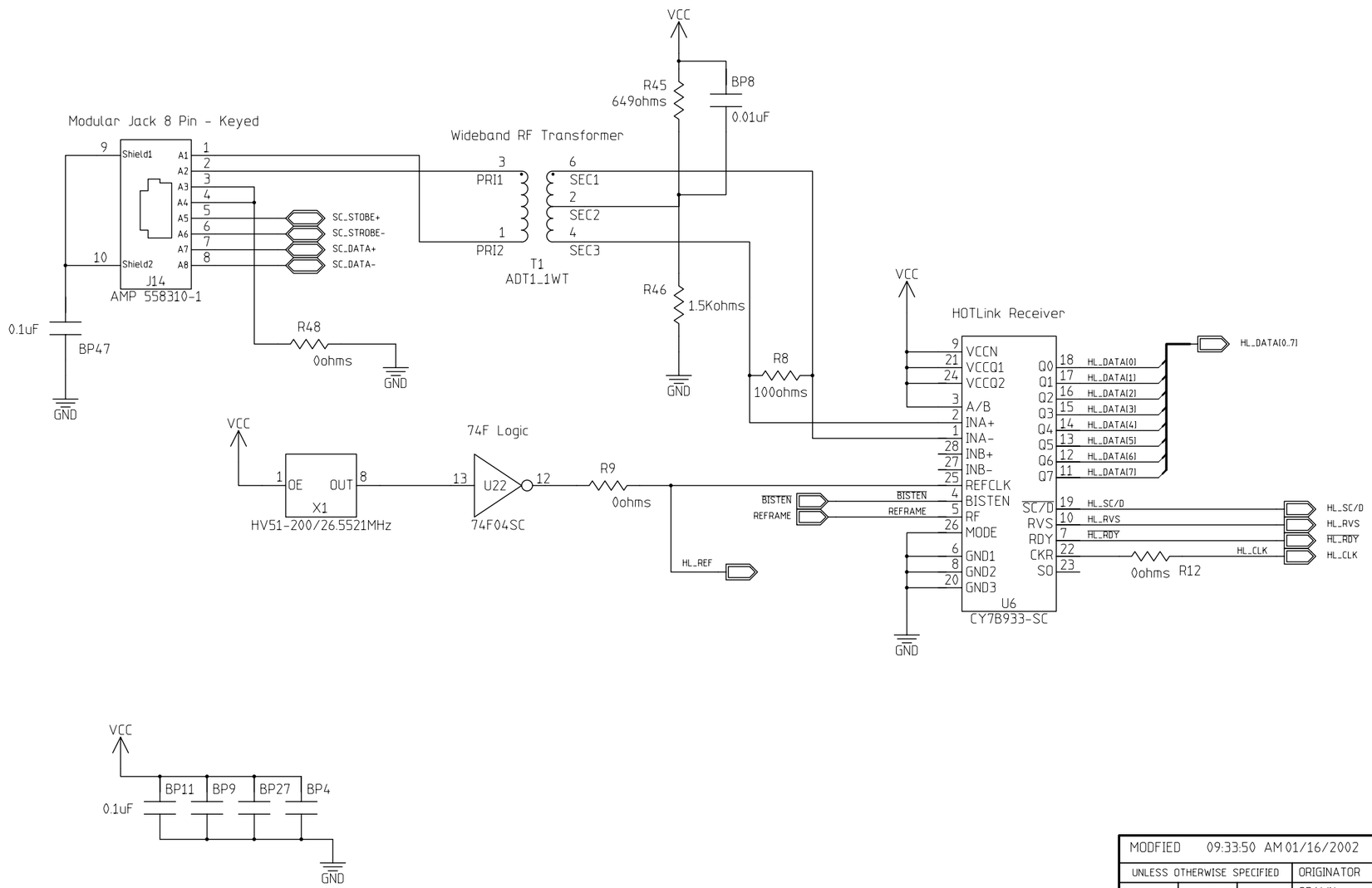

MODFIED 09:33:50 AM 01/16/2002					
UNLESS OTHERWISE SPECIFIED			ORIGINATOR	Tom Fitzpatrick	
FRACTIONS	DECIMALS	ANGLES	DRAWN	Tom Fitzpatrick	
			CHECKED		
1. BREAK ALL SHARP EDGES 1/64 MAX.			APPROVED		
2. DO NOT SCALE DWG.			USED ON		
3. DIMENSIONING IN ACCORD WITH ANSI Y14.5 STD's.			MATERIAL		
MAX. ALL MACHINED SURFACES					

Fermi National Accelerator Laboratory
United States Department of Energy

C:\VB_JOBS\mtm\Mtm.prj

MINOS CLOCK SYSTEM
MINDER TIMING MODULE (MTM)
HOTLINK RECEIVER

SIZE	SCALE	FILMED	DRAWING NUMBER	PAGE 01 of 01	REV
C	1:1				

H=4ND; V=4LA

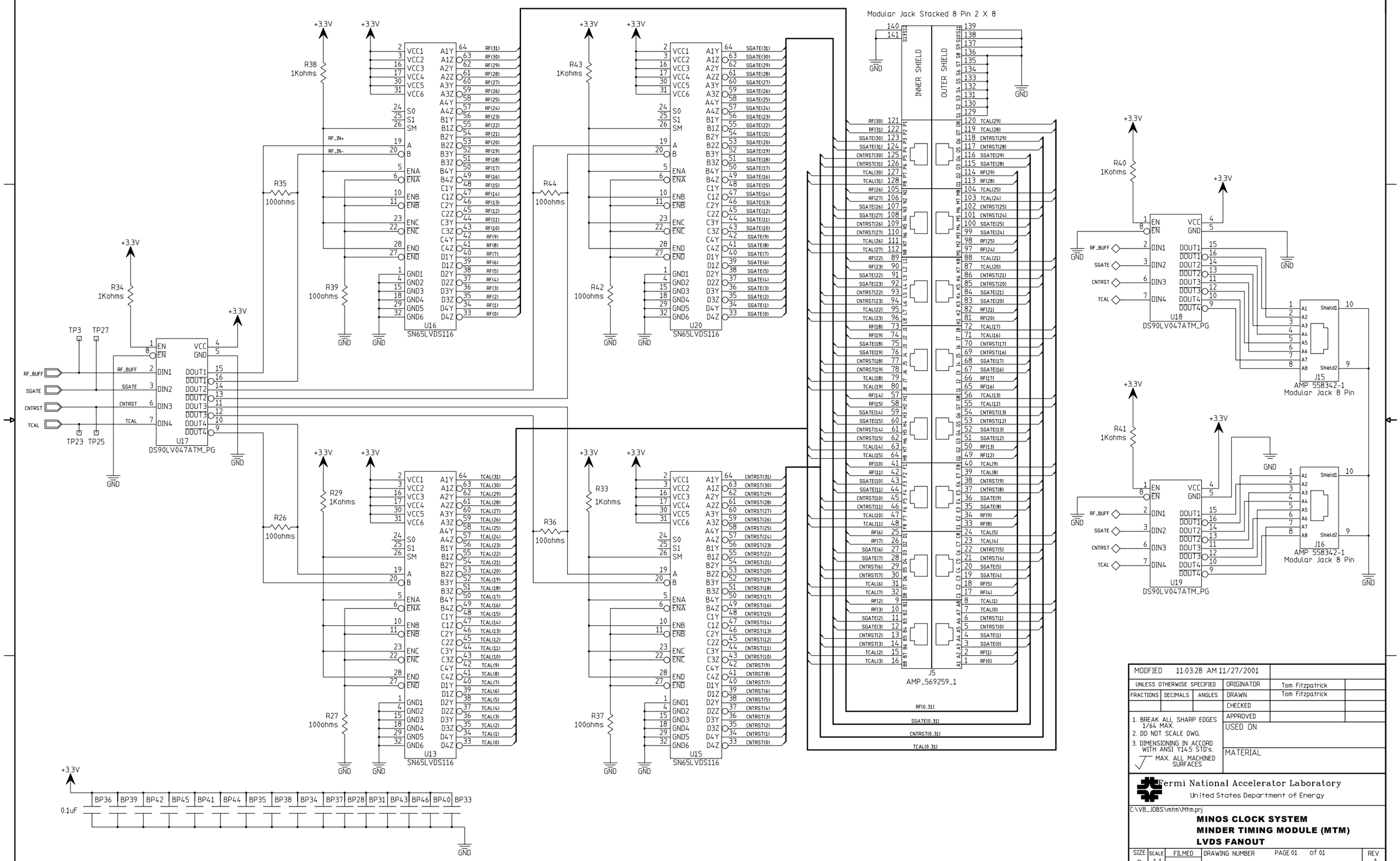

MODIFIED 11:03:28 AM 11/27/2001				
UNLESS OTHERWISE SPECIFIED			ORIGINATOR	Tom Fitzpatrick
FRACTIONS	DECIMALS	ANGLES	DRAWN	Tom Fitzpatrick
			CHECKED	
1. BREAK ALL SHARP EDGES 1/64 MAX.			APPROVED	
2. DO NOT SCALE DWG.			USED ON	
3. DIMENSIONING IN ACCORD WITH ANSI Y14.5 STD'S.			MATERIAL	
√ MAX. ALL MACHINED SURFACES				

Fermi National Accelerator Laboratory
United States Department of Energy

C:\VB_JOBS\mtm\Mtm.prj

MINOS CLOCK SYSTEM
MINDER TIMING MODULE (MTM)
LVDS FANOUT

SIZE	SCALE	FILMED	DRAWING NUMBER	PAGE 01 of 01	REV
D	1:1				A

H=8ND; V=4LA

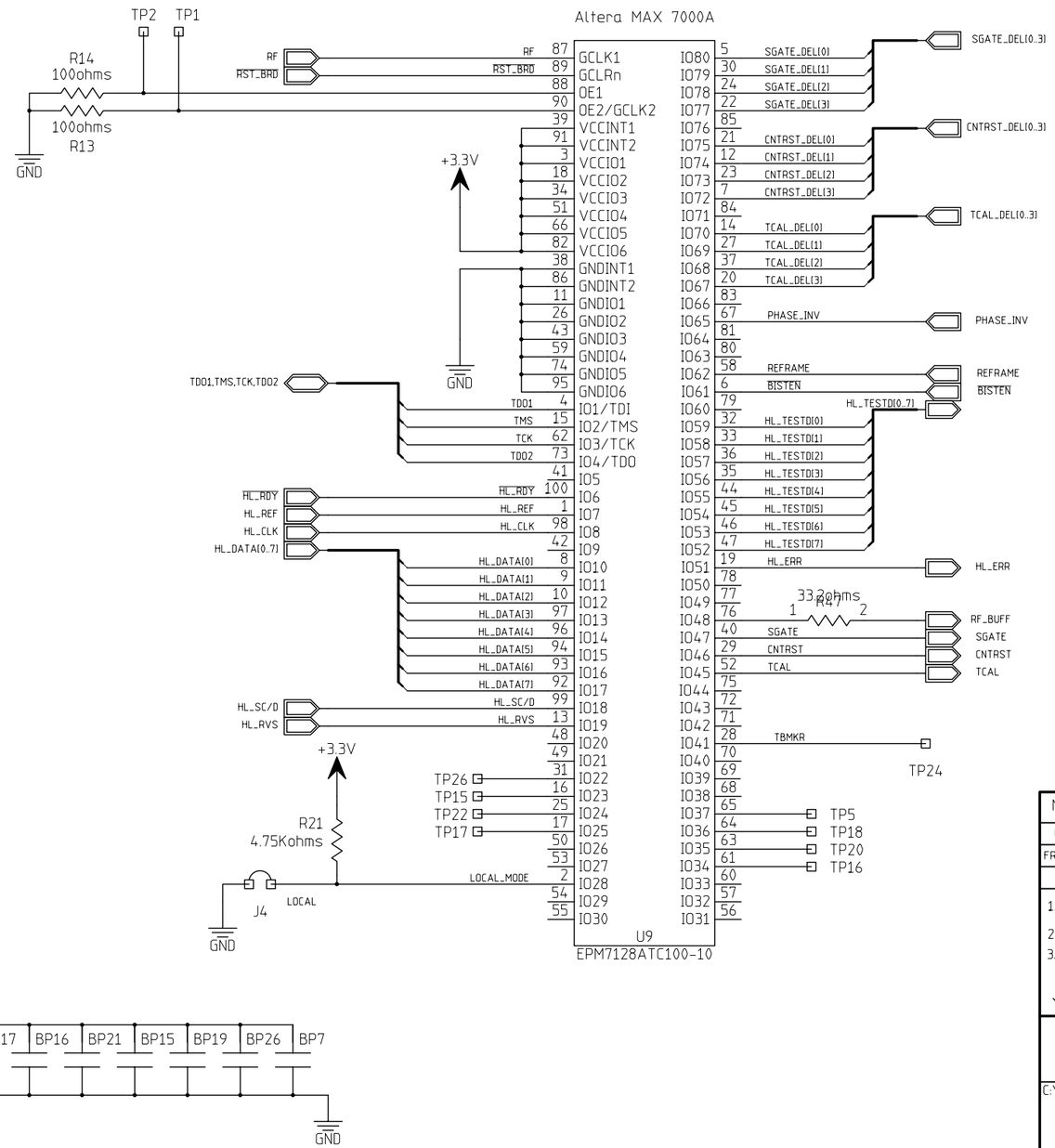

MODIFIED 04:19:55 PM 12/07/2001				
UNLESS OTHERWISE SPECIFIED			ORIGINATOR	Tom Fitzpatrick
FRACTIONS	DECIMALS	ANGLES	DRAWN	Tom Fitzpatrick
			CHECKED	
			APPROVED	

1. BREAK ALL SHARP EDGES 1/64 MAX.
2. DO NOT SCALE DWG.
3. DIMENSIONING IN ACCORD WITH ANSI Y14.5 STD's.

√ MAX. ALL MACHINED SURFACES

USED ON

MATERIAL

Fermi National Accelerator Laboratory
United States Department of Energy

C:\VB_JOBS\mtm\Mtm.prj

MINOS CLOCK SYSTEM
MINDER TIMING MODULE (MTM)
TIMING DECODER

SIZE	SCALE	FILMED	DRAWING NUMBER	PAGE 01 of 01	REV
C	1:1				

H=4ND; V=4LA

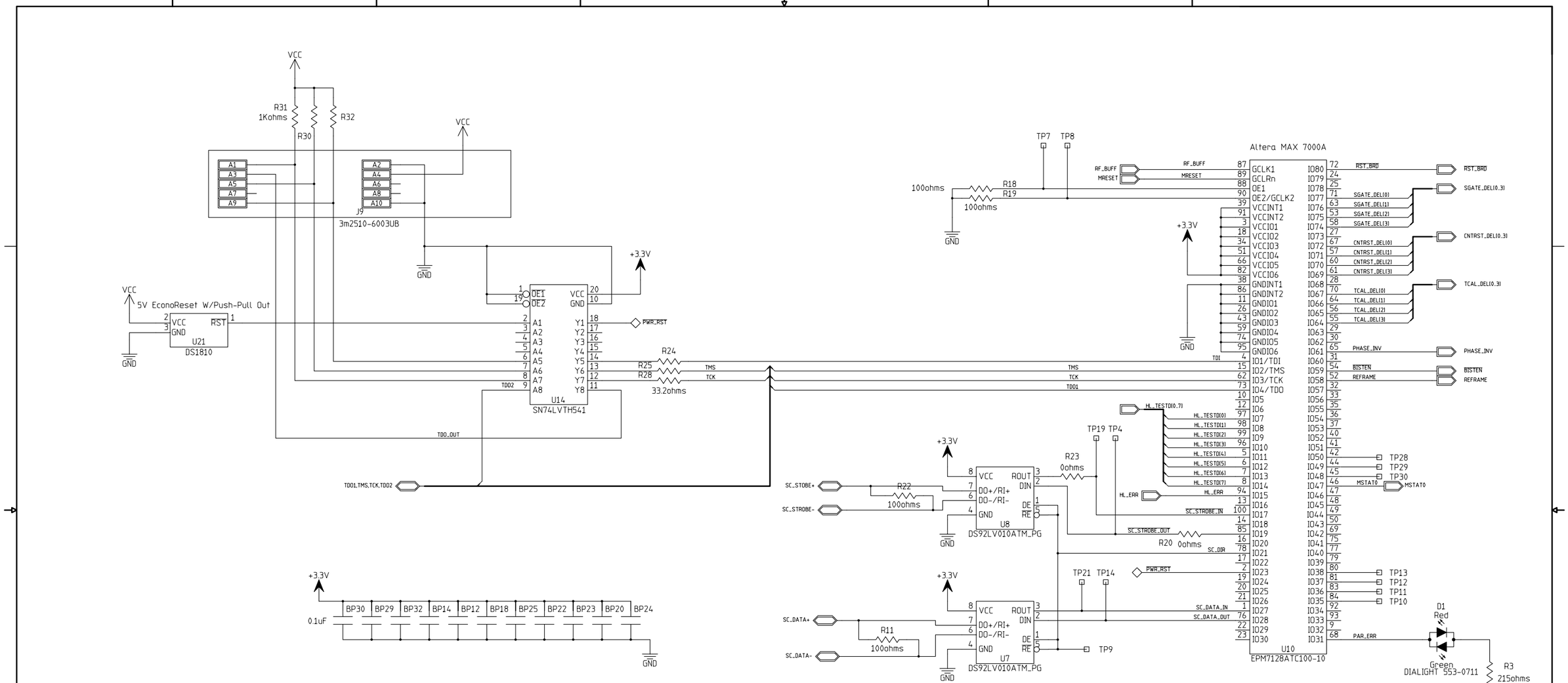

MODFIED 03:11:04 PM 12/10/2001				
UNLESS OTHERWISE SPECIFIED			ORIGINATOR	Tom Fitzpatrick
FRACTIONS	DECIMALS	ANGLES	DRAWN	Tom Fitzpatrick
			CHECKED	
			APPROVED	

1. BREAK ALL SHARP EDGES 1/64 MAX.
2. DO NOT SCALE DWG.
3. DIMENSIONING IN ACCORD WITH ANSI Y14.5 STD's.

√ MAX. ALL MACHINED SURFACES

USED ON

MATERIAL

Fermi National Accelerator Laboratory
United States Department of Energy

C:\VB_JOBS\mtm\Mtm.prj

MINOS CLOCK SYSTEM
MINDER TIMING MODULE (MTM)
SLOW CONTROL INTERFACE

SIZE	SCALE	FILMED	DRAWING NUMBER	PAGE 01 of 01	REV
D	1:1				A

H=8ND; V=4LA