MINOS MENU Module - Version 5 - 11-Nov-2002

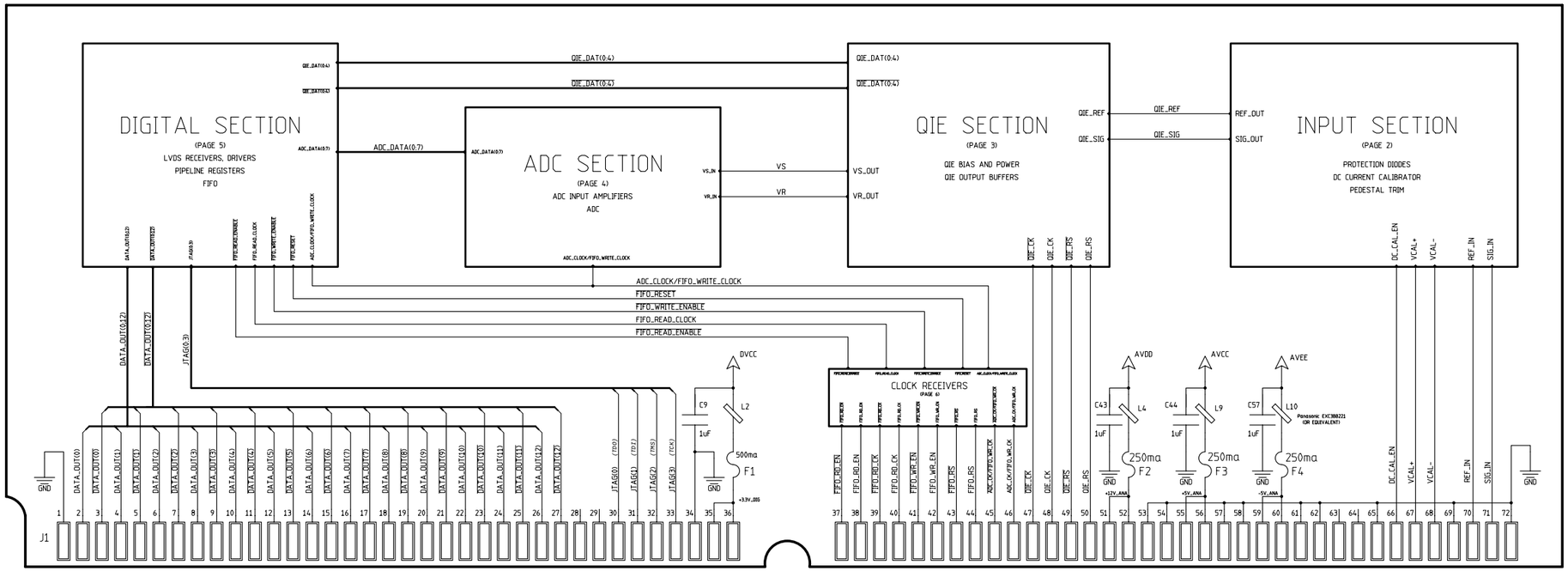

NOTES

1. POWER SUPPLY LEVELS ARE.
   AVDD: ANALOG +12 VOLTS
   AVCC: ANALOG +5.0 VOLTS
   AVEE: ANALOG -5.0 VOLTS
   DVCC: DIGITAL +3.3 VOLTS
2. ALL RESISTORS ARE 1% TOL, UNLESS OTHERWISE NOTED.

MODIFIED 04:11:49 PM 11/12/2002				
UNLESS OTHERWISE SPECIFIED			ORIGINATOR	C. NELSON	01-FEB-2002
FRACTIONS	DECIMALS	ANGLES	DRAWN		
			CHECKED		
			APPROVED		

1. BREAK ALL SHARP EDGES 1/64 MAX.
2. DO NOT SCALE DWG.
3. DIMENSIONING IN ACCORD WITH ANSI Y14.5 STD's.

√ MAX. ALL MACHINED SURFACES

USED ON

MATERIAL

Fermi National Accelerator Laboratory
United States Department of Energy

C:\PPD_JOBS\Menu_5\Menu_5.prj

MENU Module - MINOS Near Detector Readout Front End
Top Level Schematic
Pin Assignments and Signal Names
Version 5

SIZE	SCALE	FILMED	DRAWING NUMBER	PAGE 01 of 06	REV
D	1:1				A

H=BND; V=4LA

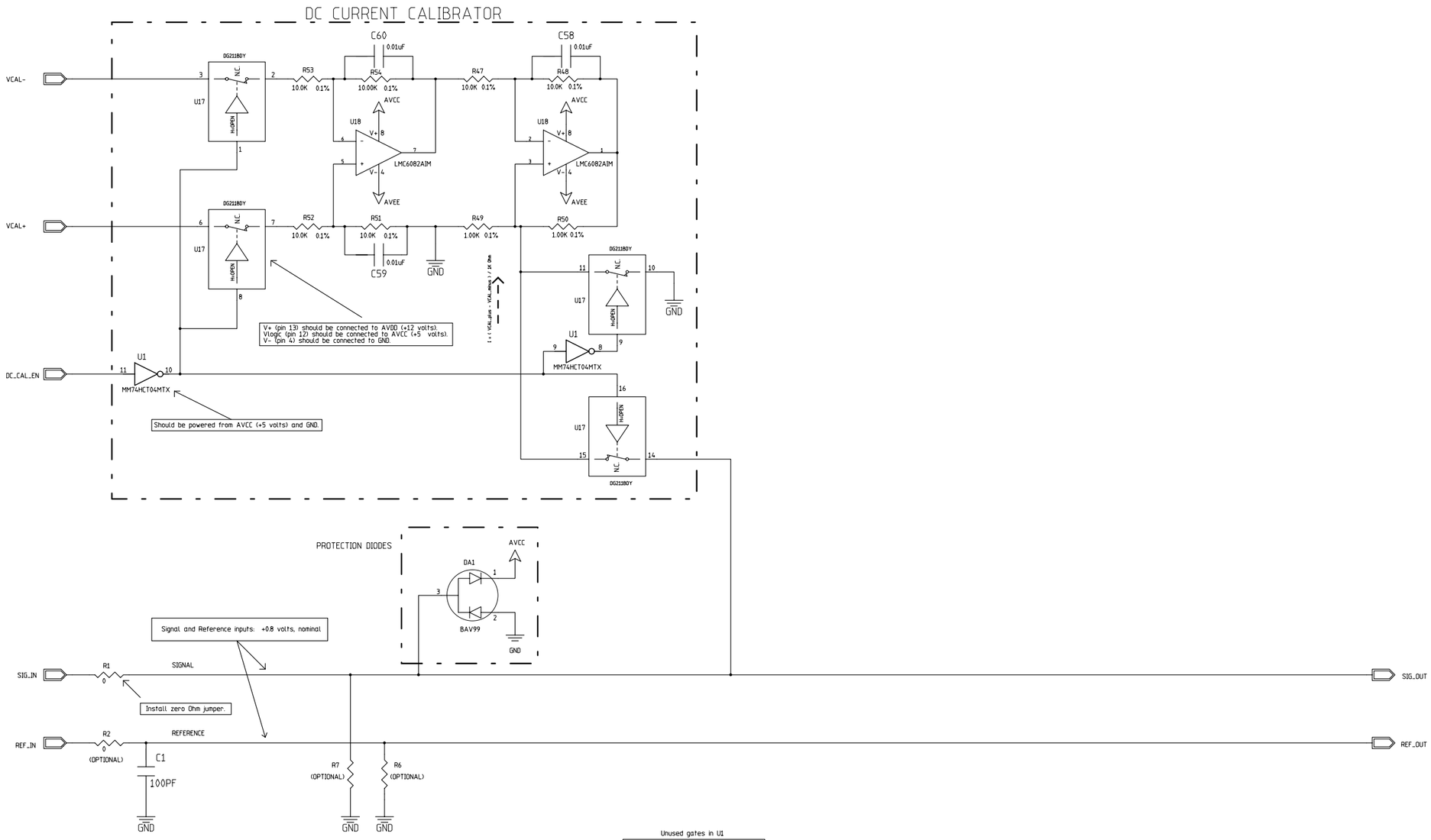

Unused gates in U1

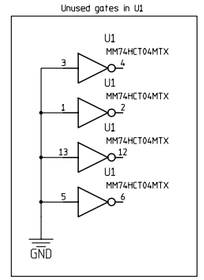

NOTES

1. POWER SUPPLY LEVELS ARE:
   AVDD: ANALOG +12 VOLTS
   AVCC: ANALOG +5.0 VOLTS
   AVEE: ANALOG -5.0 VOLTS
   DVCC: DIGITAL +3.3 VOLTS
2. ALL RESISTORS ARE 1% TOL, UNLESS OTHERWISE NOTED.

MODFIED 04:33:28 PM 11/12/2002					
UNLESS OTHERWISE SPECIFIED			ORIGINATOR	C. NELSON	01-FEB-2002
FRACTIONS	DECIMALS	ANGLES	DRAWN		
			CHECKED		
			APPROVED		
1. BREAK ALL SHARP EDGES 1/64 MAX. 2. DO NOT SCALE DWG. 3. DIMENSIONING IN ACCORD WITH ANSI Y14.5 STD'S. √ MAX. ALL MACHINED SURFACES			USED ON		
			MATERIAL		

Fermi National Accelerator Laboratory
United States Department of Energy

C:\PPD_JOBS\Menu_5\Menu_5.prj

MENU Module - MINOS Near Detector Readout Front End Input Section

Protection diodes, DC current calibrator, and pedestal trim.

VERSION 5

SIZE	SCALE	FILMED	DRAWING NUMBER	PAGE 02 of 06	REV
D	1:1			2 of 6	A

H=BND; V=4LA

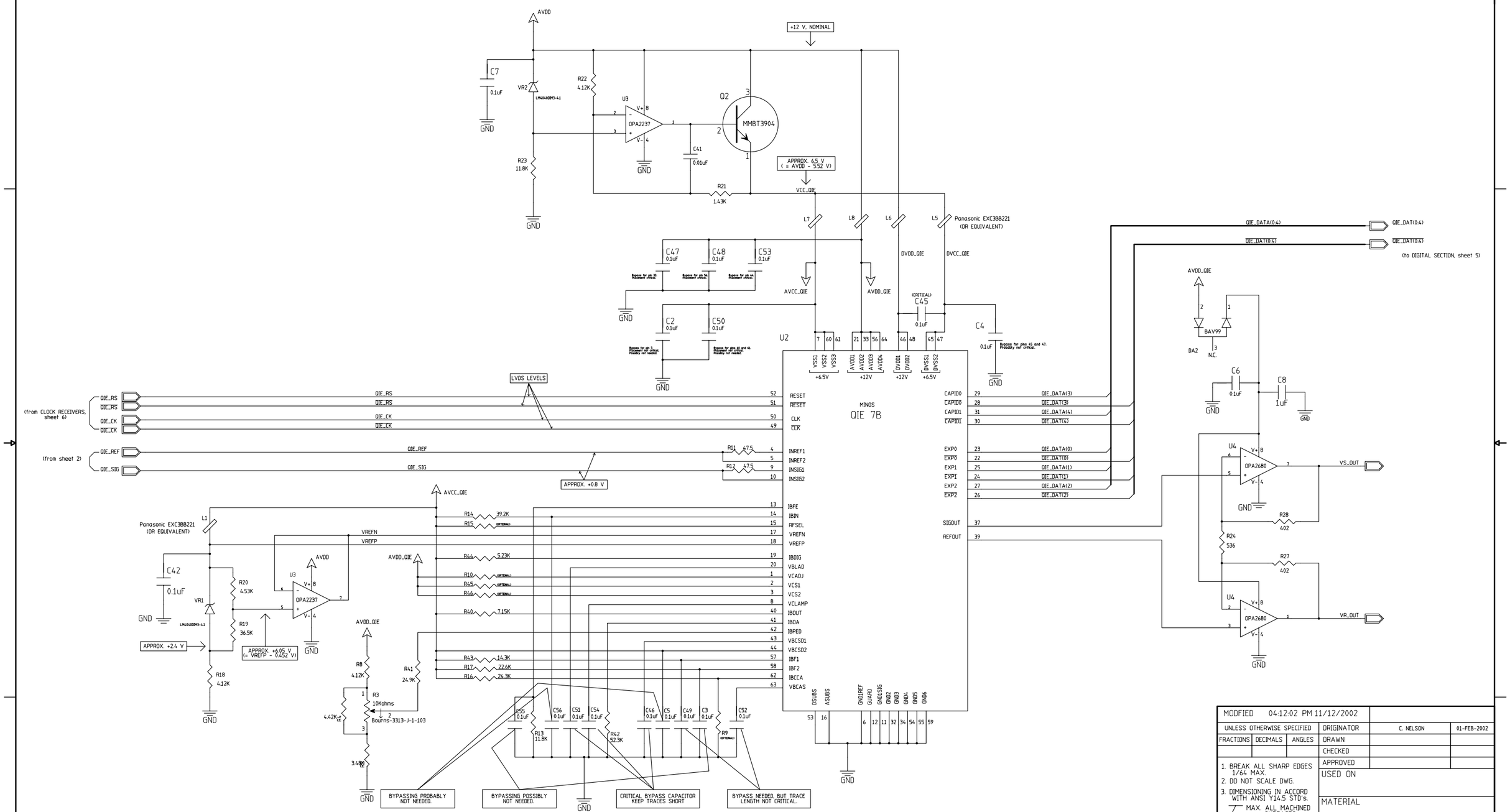

NOTES

1. POWER SUPPLY LEVELS ARE.
   AVDD: ANALOG +12 VOLTS
   AVCC: ANALOG +5.0 VOLTS
   AVEE: ANALOG -5.0 VOLTS
   DVCC: DIGITAL +3.3 VOLTS
2. ALL RESISTORS ARE 1% TOL., UNLESS OTHERWISE NOTED.

MODFIED 04:12:02 PM 11/12/2002				
UNLESS OTHERWISE SPECIFIED			ORIGINATOR	C. NELSON	01-FEB-2002
FRACTIONS	DECIMALS	ANGLES	DRAWN		
			CHECKED		
			APPROVED		

1. BREAK ALL SHARP EDGES 1/64 MAX.
2. DO NOT SCALE DWG.
3. DIMENSIONING IN ACCORD WITH ANSI Y14.5 STD's.

MAX. ALL MACHINED SURFACES

USED ON

MATERIAL

Fermi National Accelerator Laboratory
United States Department of Energy

C:\PPD_JOBS\Menu_5\Menu_5.prj

MENU Module - MINOS Near Detector Readout Front End
QIE Section
QIE biasing, power and outputs
VERSION 5

SIZE	SCALE	FILMED	DRAWING NUMBER	PAGE 03 of 06	REV
D	1:1				A

H=BND; V=4LA

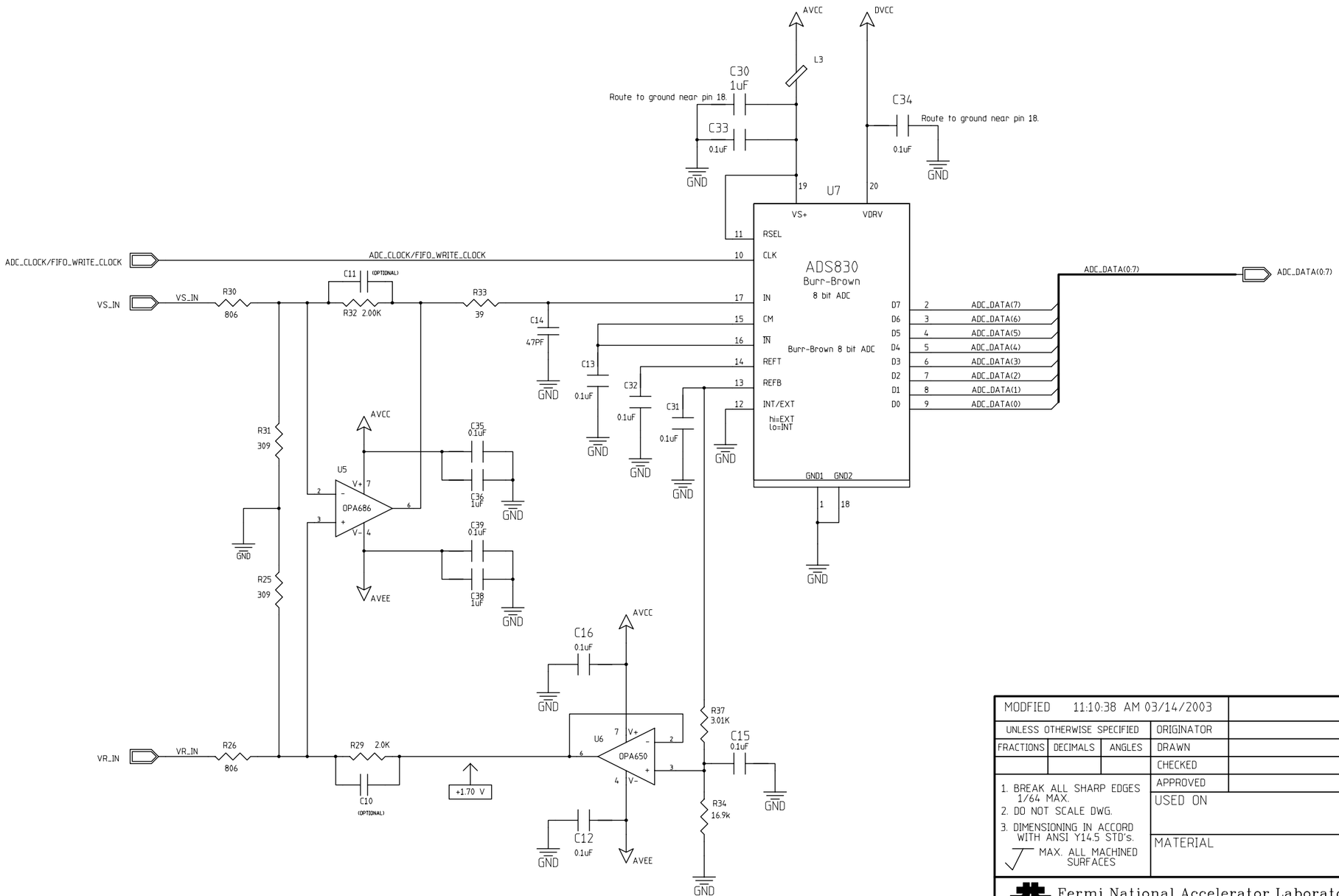

NOTES

1. POWER SUPPLY LEVELS ARE:
   AVDD: ANALOG +12 VOLTS
   AVCC: ANALOG +5.0 VOLTS
   AVEE: ANALOG -5.0 VOLTS
   DVCC: DIGITAL +3.3 VOLTS
2. ALL RESISTORS ARE 1% TOL., UNLESS OTHERWISE NOTED.

MODFIED 11:10:38 AM 03/14/2003					
UNLESS OTHERWISE SPECIFIED			ORIGINATOR		
FRACTIONS	DECIMALS	ANGLES	DRAWN		
			CHECKED		
1. BREAK ALL SHARP EDGES 1/64 MAX.			APPROVED		
2. DO NOT SCALE DWG.			USED ON		
3. DIMENSIONING IN ACCORD WITH ANSI Y14.5 STD's.			MATERIAL		
MAX. ALL MACHINED SURFACES					

Fermi National Accelerator Laboratory
United States Department of Energy

MENU Module - MINOS Near Detector Readout Front End
Digitizer Section
ADC Driver Amps and ADC
VERSION 5

SIZE	SCALE	FILMED	DRAWING NUMBER	PAGE 04 of 06	REV
C	1:1				

H=4ND; V=4LA

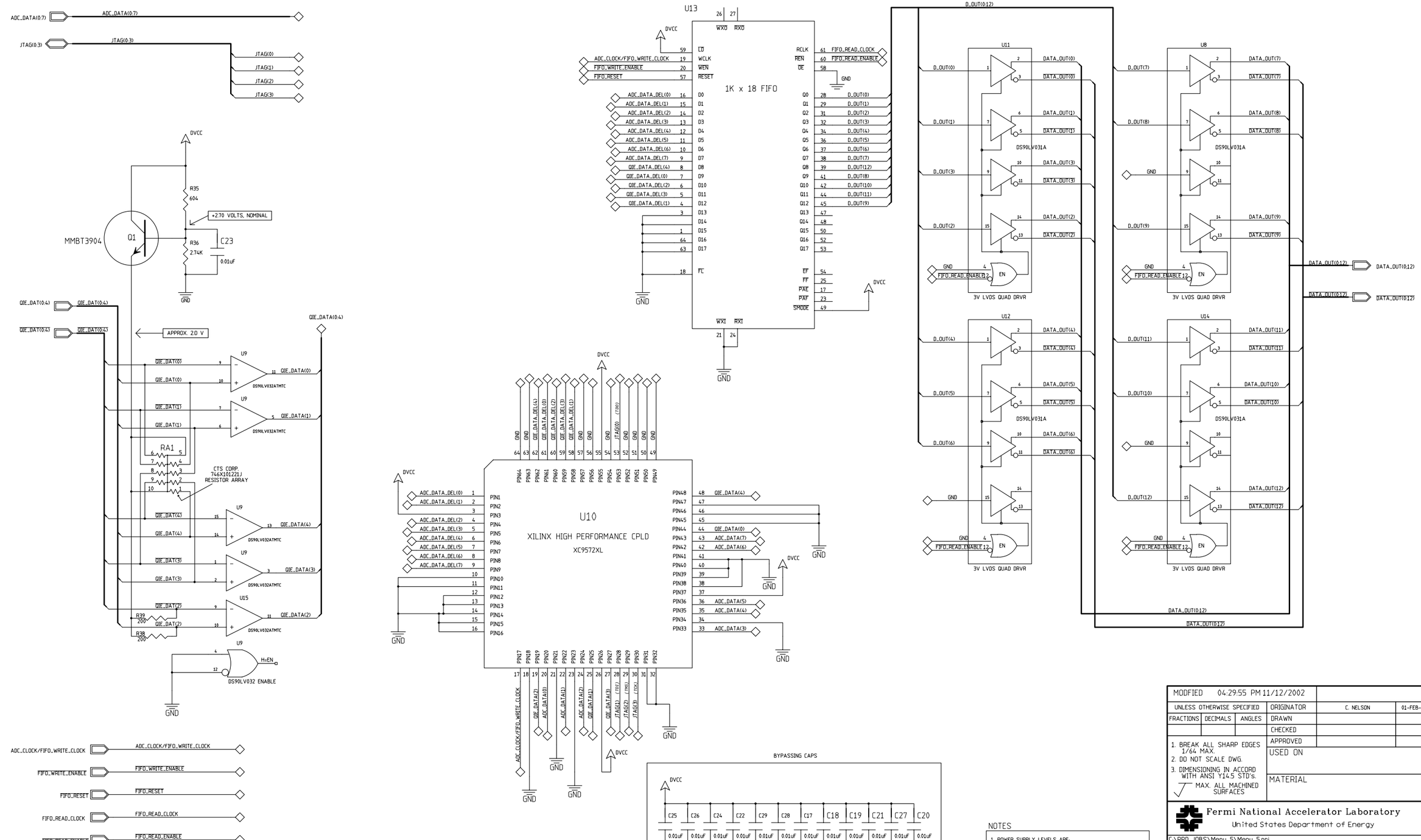

NOTES

1. POWER SUPPLY LEVELS ARE:
   AVDD: ANALOG +12 VOLTS
   AVCC: ANALOG +5.0 VOLTS
   AVEE: ANALOG -5.0 VOLTS
   DVCC: DIGITAL +3.3 VOLTS
2. ALL RESISTORS ARE 1% TOL, UNLESS OTHERWISE NOTED.

MODIFIED 04:29:55 PM 11/12/2002				
UNLESS OTHERWISE SPECIFIED			ORIGINATOR	C. NELSON	01-FEB-2002
FRACTIONS	DECIMALS	ANGLES	DRAWN		
			CHECKED		
			APPROVED		

1. BREAK ALL SHARP EDGES 1/64 MAX.
2. DO NOT SCALE DWG.
3. DIMENSIONING IN ACCORD WITH ANSI Y14.5 STD's.

MAX. ALL MACHINED SURFACES

USED ON

MATERIAL

Fermi National Accelerator Laboratory
United States Department of Energy

C:\PPD_JOBS\Menu_5\Menu_5.prj

MENU Module - MINOS Near Detector Readout Front End Digital Section

Data alignment, data storage and LVDS output drivers.

VERSION 5

SIZE	SCALE	FILMED	DRAWING NUMBER	PAGE 05 of 06	REV
D	1:1				A

H=BND; V=4LA

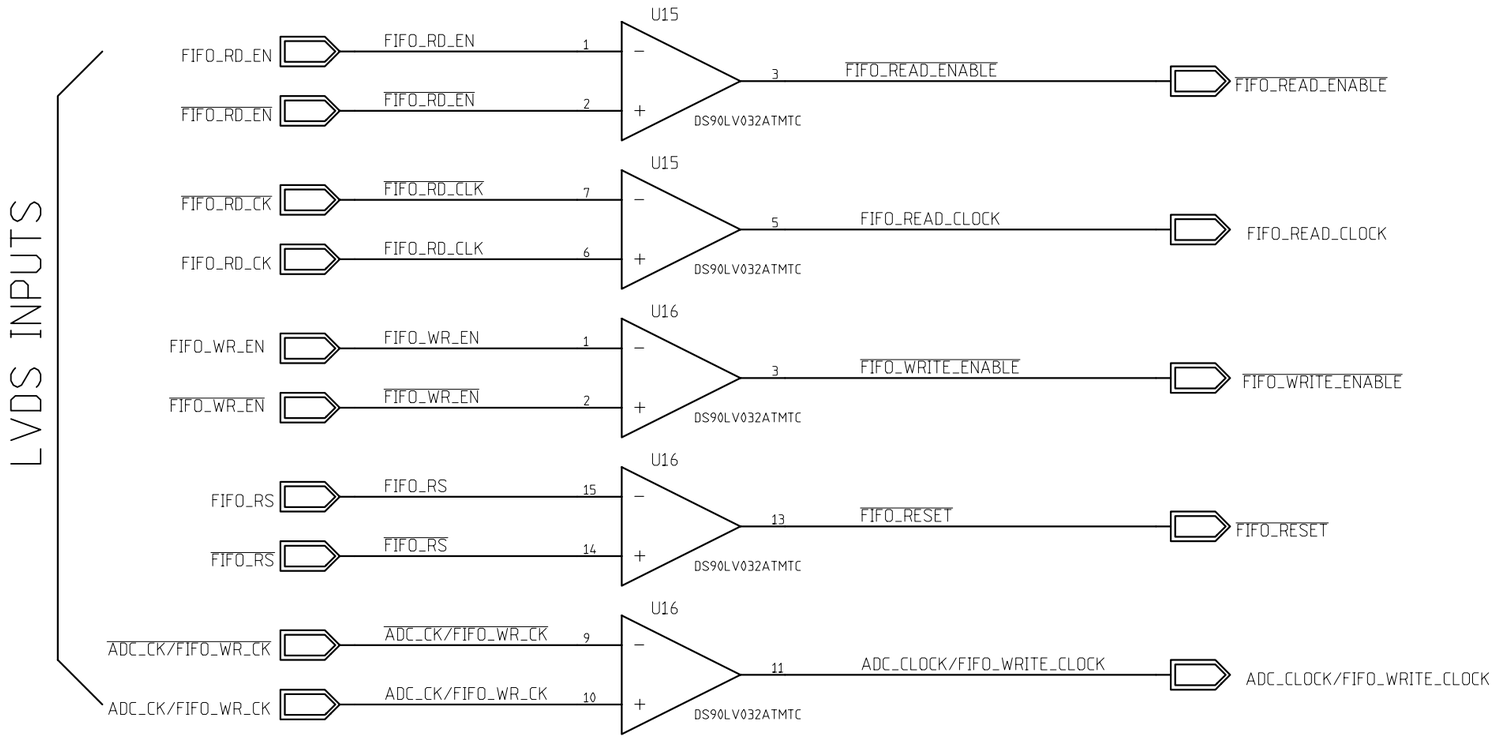

NOTES

1. POWER SUPPLY LEVELS ARE:
   - AVDD: ANALOG +12 VOLTS
   - AVCC: ANALOG +5.0 VOLTS
   - AVEE: ANALOG -5.0 VOLTS
   - DVCC: DIGITAL +3.3 VOLTS
2. ALL RESISTORS ARE 1% TOL., UNLESS OTHERWISE NOTED.

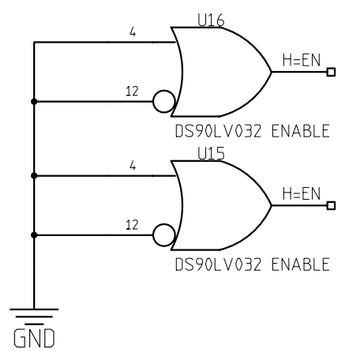

UNUSED LVDS RECEIVERS IN U15 AND U16

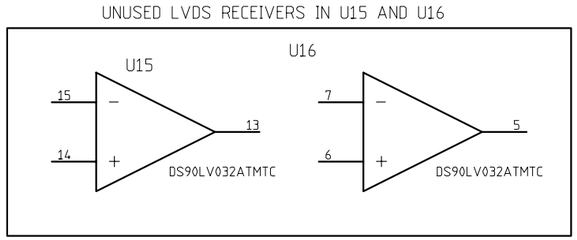

BYPASSING FOR U15 AND U16

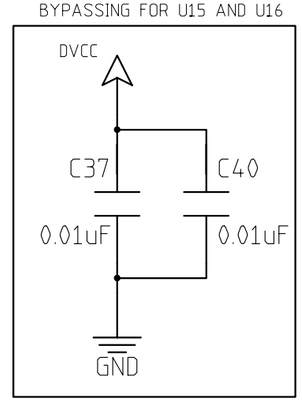

MODFIED 04:33:27 PM 11/12/2002					
UNLESS OTHERWISE SPECIFIED			ORIGINATOR	C. NELSON	01-FEB-2002
FRACTIONS	DECIMALS	ANGLES	DRAWN		
			CHECKED		
1. BREAK ALL SHARP EDGES 1/64 MAX.			APPROVED		
2. DO NOT SCALE DWG.			USED ON		
3. DIMENSIONING IN ACCORD WITH ANSI Y14.5 STD's.			MATERIAL		
MAX. ALL MACHINED SURFACES					

Fermi National Accelerator Laboratory
United States Department of Energy

C:\PPD_JOBS\Menu_5\Menu_5.prj

MENU Module - MINOS Near Detector Readout Front End
LVDS Clock Receivers
Version 5

SIZE	SCALE	FILMED	DRAWING NUMBER	PAGE 06 of 06	REV
B	1:1				

H=2LA; V=2LA