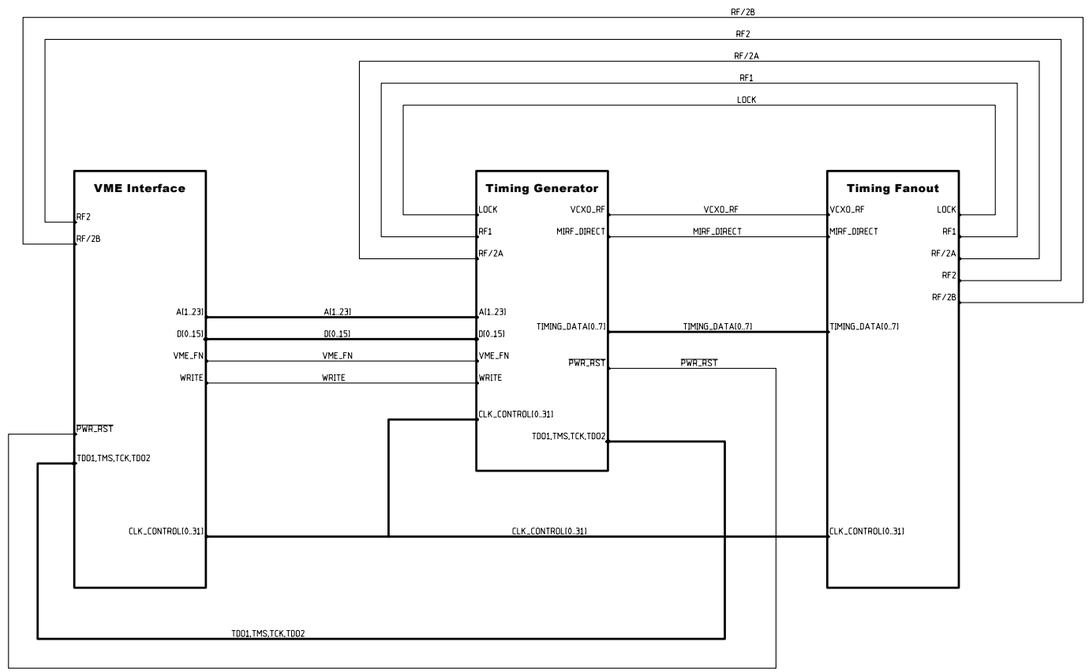

MODIFIED 01:37:17 PM 04/10/2001				
UNLESS OTHERWISE SPECIFIED			ORIGINATOR	Tom Fitzpatrick
FRACTIONS	DECIMALS	ANGLES	DRAWN	Tom Fitzpatrick
			CHECKED	
			APPROVED	

1. BREAK ALL SHARP EDGES 1/64 MAX.
2. DO NOT SCALE DWG.
3. DIMENSIONING IN ACCORD WITH ANSI Y14.5 STD's.

√ MAX. ALL MACHINED SURFACES

USED ON

MATERIAL

Fermi National Accelerator Laboratory
United States Department of Energy

C:\VB_JOBS\MCC\Mcc.prj

MINOS CLOCK SYSTEM
MINDER TIMING MODULE (MTM)
TOP LEVEL HIERARCHY

SIZE	SCALE	FILMED	DRAWING NUMBER	PAGE 01 of 01	REV
D	1:1				A

H=8ND; V=4LA

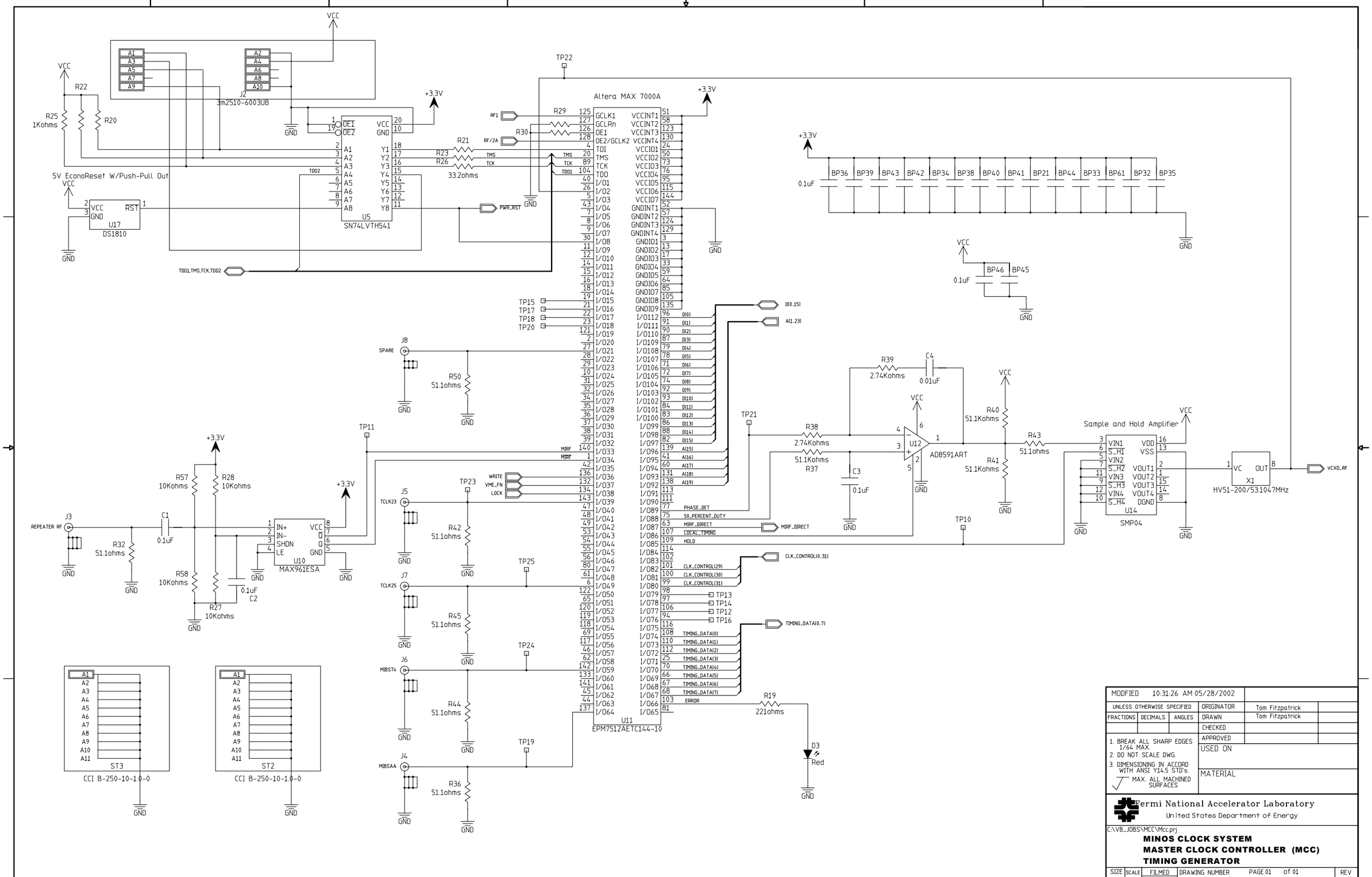

MODIFIED 10:31:26 AM 05/28/2002				
UNLESS OTHERWISE SPECIFIED			ORIGINATOR	Tom Fitzpatrick
FRACTIONS	DECIMALS	ANGLES	DRAWN	Tom Fitzpatrick
			CHECKED	
			APPROVED	

1. BREAK ALL SHARP EDGES 1/64 MAX.
2. DO NOT SCALE DWG.
3. DIMENSIONING IN ACCORD WITH ANSI Y14.5 STD's.

MAX. ALL MACHINED SURFACES

USED ON

MATERIAL

Fermi National Accelerator Laboratory
United States Department of Energy

C:\VB_JOBS\MCC\Mcc.prj

MINOS CLOCK SYSTEM
MASTER CLOCK CONTROLLER (MCC)
TIMING GENERATOR

SIZE	SCALE	FILMED	DRAWING NUMBER	PAGE 01 of 01	REV
D	1:1				A

H:8ND; V:4LA

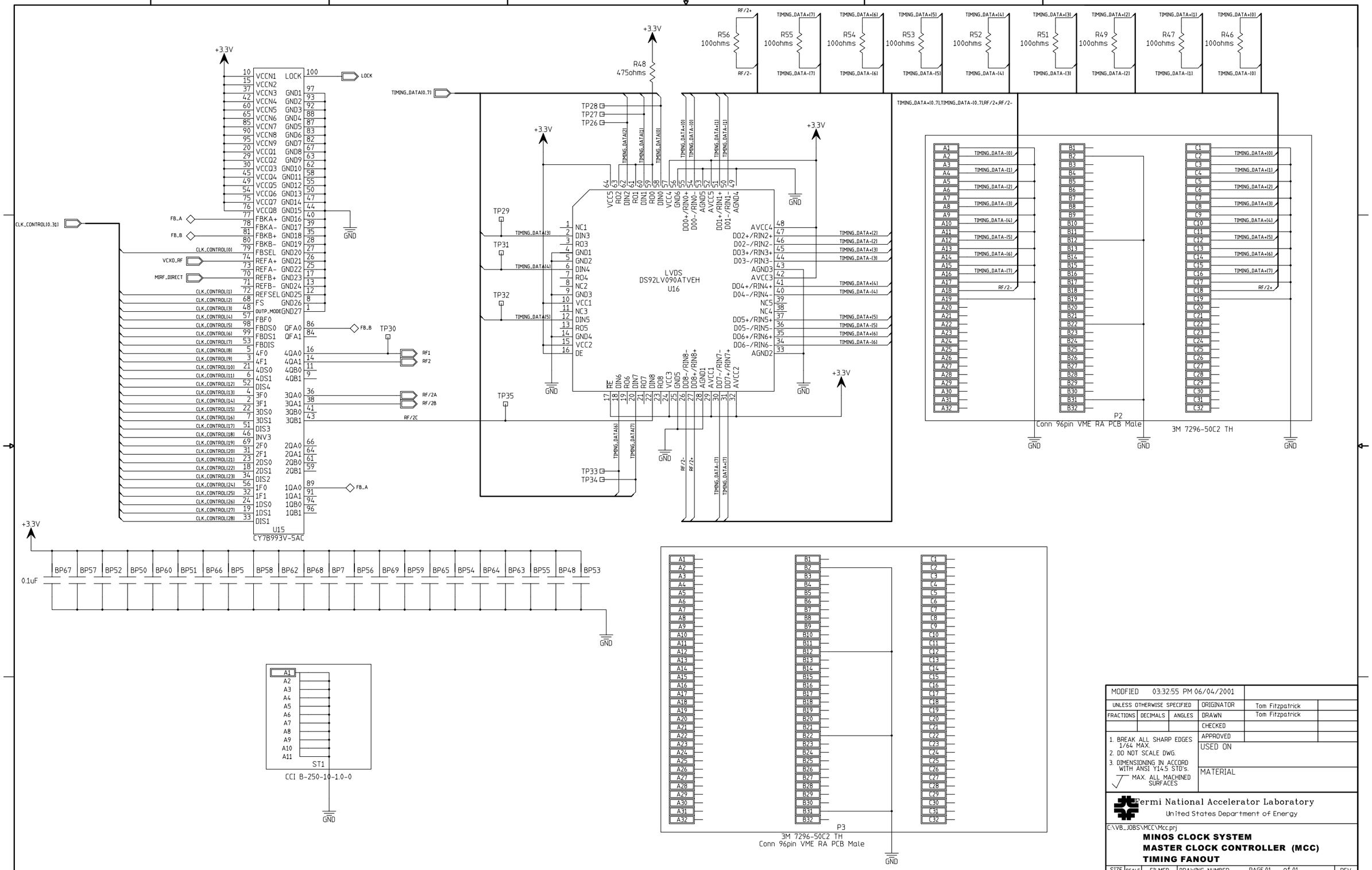

MODIFIED 03:32:55 PM 06/04/2001				
UNLESS OTHERWISE SPECIFIED			ORIGINATOR	Tom Fitzpatrick
FRACTIONS	DECIMALS	ANGLES	DRAWN	Tom Fitzpatrick
			CHECKED	
1. BREAK ALL SHARP EDGES 1/64 MAX.			APPROVED	
2. DO NOT SCALE DWG.			USED ON	
3. DIMENSIONING IN ACCORD WITH ANSI Y14.5 STD's.			MATERIAL	
MAX. ALL MACHINED SURFACES				

Fermi National Accelerator Laboratory
United States Department of Energy

C:\VB_JOBS\MCC\Mcc.prj

MINOS CLOCK SYSTEM
MASTER CLOCK CONTROLLER (MCC)
TIMING FANOUT

SIZE	SCALE	FILMED	DRAWING NUMBER	PAGE 01 of 01	REV
D	1:1				A

H=8ND; V=4LA

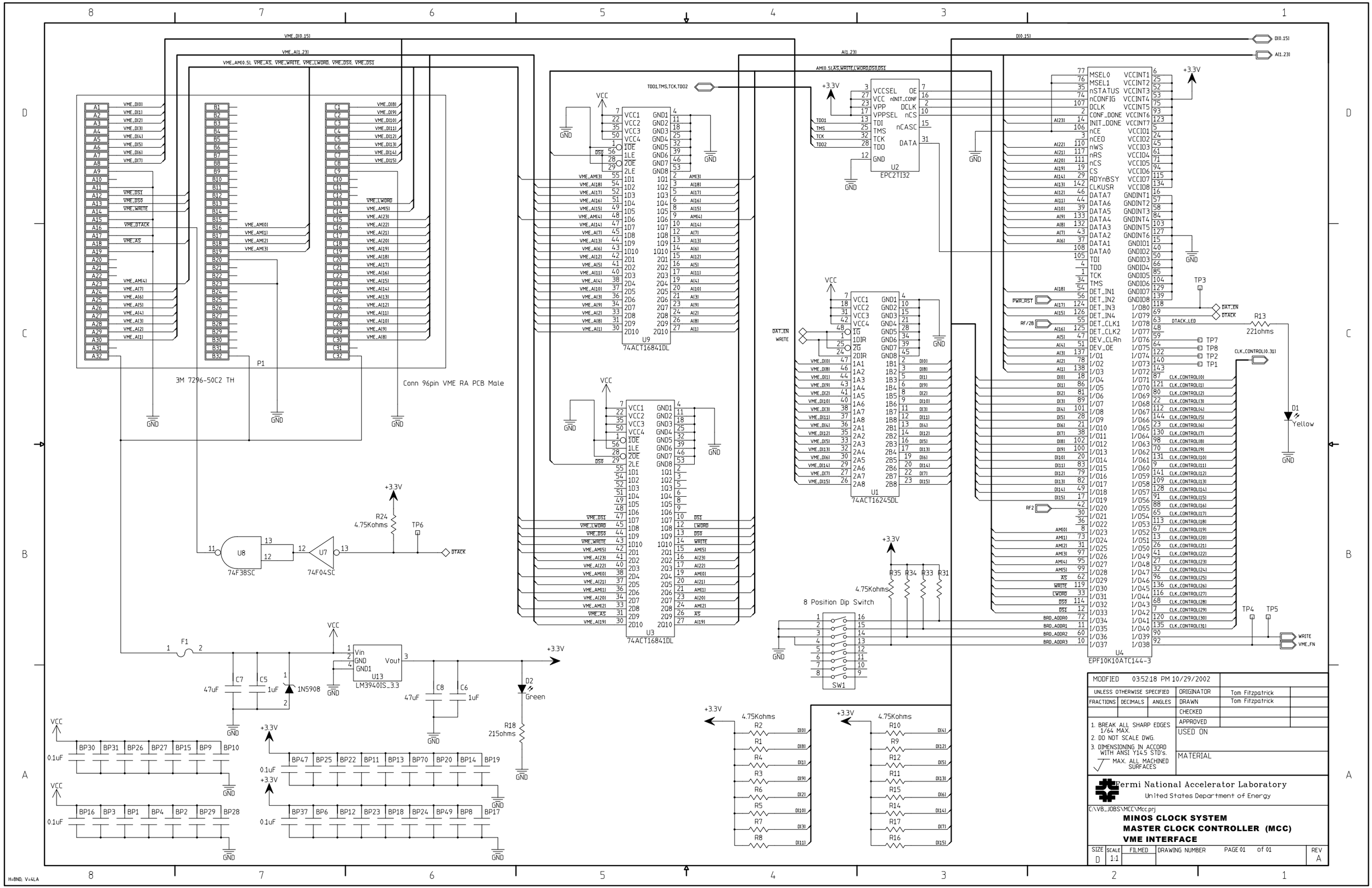

3M 7296-50C2 TH
Conn 96pin VME RA PCB Male
P1
U9
74ACT16841DL
U3
74ACT16841DL
U1
74ACT16245DL
U2
EPC2TI32
U4
EPF10K10ATC144-3
U8
74F38SC
U7
74F04SC
U13
LM3940IS_3.3
8 Position Dip Switch
SW1
R24
4.75Kohms
R35
R34
R33
R31
R13
221ohms
R18
215ohms
D1
Yellow
D2
Green
1N5908
F1
C7
C5
C8
C6
47uF
1uF
0.1uF
+3.3V
VCC
GND
MODFIED 03:52:18 PM 10/29/2002
UNLESS OTHERWISE SPECIFIED
FRACTIONS
DECIMALS
ANGLES
ORIGINATOR Tom Fitzpatrick
DRAWN Tom Fitzpatrick
CHECKED
APPROVED
USED ON
MATERIAL
1. BREAK ALL SHARP EDGES 1/64 MAX.
2. DO NOT SCALE DWG.
3. DIMENSIONING IN ACCORD WITH ANSI Y14.5 STD's.
MAX. ALL MACHINED SURFACES
Fermi National Accelerator Laboratory
United States Department of Energy
C:\VB_JOBS\MCC\Mcc.prj
MINOS CLOCK SYSTEM
MASTER CLOCK CONTROLLER (MCC)
VME INTERFACE
SIZE D
SCALE 1:1
FILMED
DRAWING NUMBER
PAGE 01 of 01
REV A
H=8ND; V=4LA