## BACKPLANE CONNECTORS
## 96 PIN VME

P1A

| | | |
|---|---|---|
| A1 | 1 | MDATA_0 |
| A2 | 2 | MDATA_1 |
| A3 | 3 | MDATA_2 |
| A4 | 4 | MDATA_3 |
| A5 | 5 | MDATA_4 |
| A6 | 6 | MDATA_5 |
| A7 | 7 | MDATA_6 |
| A8 | 8 | MDATA_7 |
| A9 | 9 | GND |
| A10 | 10 | |
| A11 | 11 | GND |
| A12 | 12 | nMSTB_1 |
| A13 | 13 | nMSTB_0 |
| A14 | 14 | nMWRITE |
| A15 | 15 | GND |
| A16 | 16 | nMDTACK |
| A17 | 17 | GND |
| A18 | 18 | nMENBL |
| A19 | 19 | GND |
| A20 | 20 | |
| A21 | 21 | |
| A22 | 22 | |
| A23 | 23 | |
| A24 | 24 | MADD_5 |
| A25 | 25 | MADD_4 |
| A26 | 26 | MADD_3 |
| A27 | 27 | MADD_2 |
| A28 | 28 | MADD_1 |
| A29 | 29 | MADD_0 |
| A30 | 30 | |
| A31 | 31 | |
| A32 | 32 | MVCC |

DIN96_ABC/R

P1B

| | | |
|---|---|---|
| B1 | 33 | |
| B2 | 34 | |
| B3 | 35 | |
| B4 | 36 | |
| B5 | 37 | |
| B6 | 38 | |
| B7 | 39 | |
| B8 | 40 | |
| B9 | 41 | |
| B10 | 42 | |
| B11 | 43 | |
| B12 | 44 | nMSTAT_0 |
| B13 | 45 | nMSTAT_1 |
| B14 | 46 | nMSTAT_2 |
| B15 | 47 | nMSTAT_3 |
| B16 | 48 | |
| B17 | 49 | |
| B18 | 50 | |
| B19 | 51 | |
| B20 | 52 | GND |
| B21 | 53 | nMFPGA_RST |
| B22 | 54 | |
| B23 | 55 | GND |
| B24 | 56 | nMTRIG_6 |
| B25 | 57 | nMTRIG_5 |
| B26 | 58 | nMTRIG_4 |
| B27 | 59 | nMTRIG_3 |
| B28 | 60 | nMTRIG_2 |
| B29 | 61 | nMTRIG_1 |
| B30 | 62 | nMTRIG_0 |
| B31 | 63 | |
| B32 | 64 | MVCC |

DIN96_ABC/R

P1C

| | | |
|---|---|---|
| C1 | 65 | MDATA_8 |
| C2 | 66 | MDATA_9 |
| C3 | 67 | MDATA_10 |
| C4 | 68 | MDATA_11 |
| C5 | 69 | MDATA_12 |
| C6 | 70 | MDATA_13 |
| C7 | 71 | MDATA_14 |
| C8 | 72 | MDATA_15 |
| C9 | 73 | GND |
| C10 | 74 | |
| C11 | 75 | |
| C12 | 76 | nMRESET |
| C13 | 77 | |
| C14 | 78 | |
| C15 | 79 | |
| C16 | 80 | |
| C17 | 81 | nMCTRL_7 |
| C18 | 82 | nMCTRL_6 |
| C19 | 83 | nMCTRL_5 |
| C20 | 84 | nMCTRL_4 |
| C21 | 85 | nMCTRL_3 |
| C22 | 86 | nMCTRL_2 |
| C23 | 87 | nMCTRL_1 |
| C24 | 88 | nMCTRL_0 |
| C25 | 89 | MADD_11 |
| C26 | 90 | MADD_10 |
| C27 | 91 | MADD_9 |
| C28 | 92 | MADD_8 |
| C29 | 93 | MADD_7 |
| C30 | 94 | MADD_6 |
| C31 | 95 | |
| C32 | 96 | MVCC |

DIN96_ABC/R

P2A

| | | |
|---|---|---|
| A1 | 1 | GND |
| A2 | 2 | MVDIGI |
| A3 | 3 | MVDIGI |
| A4 | 4 | GND |
| A5 | 5 | MVANA4 |
| A6 | 6 | MVANA4 |
| A7 | 7 | GND |
| A8 | 8 | MVANA3 |
| A9 | 9 | GND |
| A10 | 10 | MVANA2 |
| A11 | 11 | GND |
| A12 | 12 | MVANA1 |
| A13 | 13 | GND |
| A14 | 14 | GND |
| A15 | 15 | GND |
| A16 | 16 | GND |
| A17 | 17 | PMT_SIG_1 |
| A18 | 18 | GND |
| A19 | 19 | PMT_SIG_3 |
| A20 | 20 | GND |
| A21 | 21 | PMT_SIG_5 |
| A22 | 22 | GND |
| A23 | 23 | PMT_SIG_7 |
| A24 | 24 | GND |
| A25 | 25 | PMT_SIG_9 |
| A26 | 26 | GND |
| A27 | 27 | PMT_SIG_11 |
| A28 | 28 | GND |
| A29 | 29 | PMT_SIG_13 |
| A30 | 30 | GND |
| A31 | 31 | PMT_SIG_15 |
| A32 | 32 | GND |

DIN96_ABC/R

P2B

| | | |
|---|---|---|
| B1 | 33 | GND |
| B2 | 34 | MVDIGI |
| B3 | 35 | MVDIGI |
| B4 | 36 | GND |
| B5 | 37 | MVANA4 |
| B6 | 38 | MVANA4 |
| B7 | 39 | GND |
| B8 | 40 | MVANA3 |
| B9 | 41 | GND |
| B10 | 42 | MVANA2 |
| B11 | 43 | GND |
| B12 | 44 | MVANA1 |
| B13 | 45 | GND |
| B14 | 46 | VCAL+ |
| B15 | 47 | VCAL- |
| B16 | 48 | GND |
| B17 | 49 | GND |
| B18 | 50 | GND |
| B19 | 51 | GND |
| B20 | 52 | GND |
| B21 | 53 | GND |
| B22 | 54 | GND |
| B23 | 55 | GND |
| B24 | 56 | GND |
| B25 | 57 | GND |
| B26 | 58 | GND |
| B27 | 59 | GND |
| B28 | 60 | GND |
| B29 | 61 | GND |
| B30 | 62 | GND |
| B31 | 63 | GND |
| B32 | 64 | GND |

DIN96_ABC/R

P2C

| | | |
|---|---|---|
| C1 | 65 | GND |
| C2 | 66 | MVDIGI |
| C3 | 67 | MVDIGI |
| C4 | 68 | GND |
| C5 | 69 | MVANA4 |
| C6 | 70 | MVANA4 |
| C7 | 71 | GND |
| C8 | 72 | MVANA3 |
| C9 | 73 | GND |
| C10 | 74 | MVANA2 |
| C11 | 75 | GND |
| C12 | 76 | MVANA1 |
| C13 | 77 | GND |
| C14 | 78 | GND |
| C15 | 79 | GND |
| C16 | 80 | PMT_SIG_0 |
| C17 | 81 | GND |
| C18 | 82 | PMT_SIG_2 |
| C19 | 83 | GND |
| C20 | 84 | PMT_SIG_4 |
| C21 | 85 | GND |
| C22 | 86 | PMT_SIG_6 |
| C23 | 87 | GND |
| C24 | 88 | PMT_SIG_8 |
| C25 | 89 | GND |
| C26 | 90 | PMT_SIG_10 |
| C27 | 91 | GND |
| C28 | 92 | PMT_SIG_12 |
| C29 | 93 | GND |
| C30 | 94 | PMT_SIG_14 |
| C31 | 95 | GND |
| C32 | 96 | GND |

DIN96_ABC/R

## DATA OUTPUT CONNECTOR
## 36 PIN MINI D

JP1

| | | | |
|---|---|---|---|
| RDATA_0 | 1 | 19 | nRDATA_0 |
| RDATA_1 | 2 | 20 | nRDATA_1 |
| RDATA_2 | 3 | 21 | nRDATA_2 |
| RDATA_3 | 4 | 22 | nRDATA_3 |
| RDATA_4 | 5 | 23 | nRDATA_4 |
| RDATA_5 | 6 | 24 | nRDATA_5 |
| RDATA_6 | 7 | 25 | nRDATA_6 |
| RDATA_7 | 8 | 26 | nRDATA_7 |
| RDATA_8 | 9 | 27 | nRDATA_8 |
| RDATA_9 | 10 | 28 | nRDATA_9 |
| RDATA_10 | 11 | 29 | nRDATA_10 |
| RDATA_11 | 12 | 30 | nRDATA_11 |
| RDATA_12 | 13 | 31 | nRDATA_12 |
| RPAR | 14 | 32 | nRPAR |
| RHB | 15 | 33 | nRHB |
| RTB | 16 | 34 | nRTB |
| RERR | 17 | 35 | nRERR |
| RSTRB | 18 | 36 | nRSTRB |

38 37

HEADER 36 3M

## CONTROL CONNECTOR
## 8 PIN RJ45

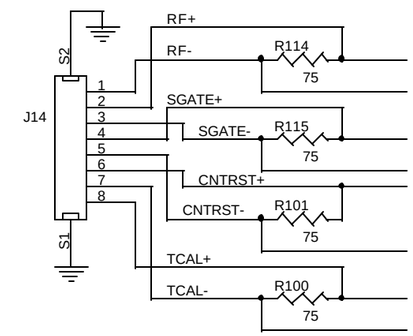


| | | | |
|---|---|---|---|
| Title | Minos Minder | | |
| Size B | Document Number Connector pinouts | | Rev <RevCode> |
| Date: Wednesday, October 30, 2002 | Sheet 1 of 1 | | |