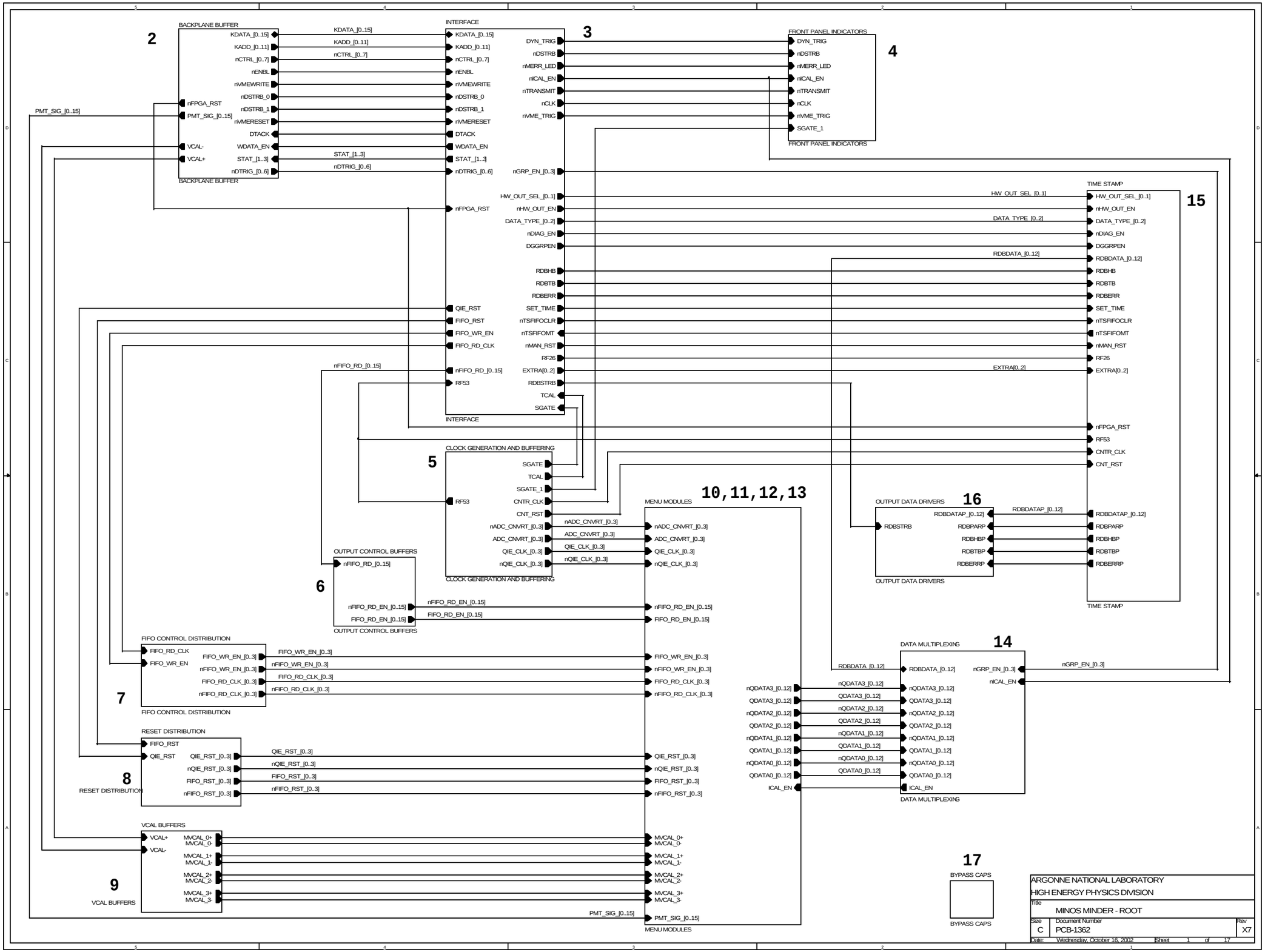
BACKPLANE BUFFER
2
KDATA_[0..15]
KADD_[0..11]
nCTRL_[0..7]
nENBL
nVMEWRITE
nDSTRB_0
nDSTRB_1
nVMERESET
DTACK
WDATA_EN
STAT_[1..3]
nDTRIG_[0..6]
nFPGA_RST
PMT_SIG_[0..15]
VCAL-
VCAL+
INTERFACE
3
DYN_TRIG
nDSTRB
nMERR_LED
nICAL_EN
nTRANSMIT
nCLK
nVME_TRIG
nGRP_EN_[0..3]
HW_OUT_SEL_[0..1]
nHW_OUT_EN
DATA_TYPE_[0..2]
nDIAG_EN
DGGRPEN
RDBHB
RDBTB
RDBERR
SET_TIME
nTSFIFOCLR
nTSFIFOMT
nMAN_RST
RF26
EXTRA[0..2]
RDBSTRB
TCAL
SGATE
QIE_RST
FIFO_RST
FIFO_WR_EN
FIFO_RD_CLK
nFIFO_RD_[0..15]
RF53
FRONT PANEL INDICATORS
4
TIME STAMP
15
RDBDATA_[0..12]
RDBDATAP_[0..12]
RDBPARP
RDBHBP
RDBTBP
RDBERRP
CNTR_CLK
CNT_RST
CLOCK GENERATION AND BUFFERING
5
nADC_CNVRT_[0..3]
ADC_CNVRT_[0..3]
QIE_CLK_[0..3]
nQIE_CLK_[0..3]
MENU MODULES
10,11,12,13
OUTPUT DATA DRIVERS
16
OUTPUT CONTROL BUFFERS
6
nFIFO_RD_EN_[0..15]
FIFO_RD_EN_[0..15]
FIFO CONTROL DISTRIBUTION
7
FIFO_WR_EN_[0..3]
nFIFO_WR_EN_[0..3]
FIFO_RD_CLK_[0..3]
nFIFO_RD_CLK_[0..3]
RESET DISTRIBUTION
8
QIE_RST_[0..3]
nQIE_RST_[0..3]
FIFO_RST_[0..3]
nFIFO_RST_[0..3]
VCAL BUFFERS
9
MVCAL_0+
MVCAL_0-
MVCAL_1+
MVCAL_1-
MVCAL_2+
MVCAL_2-
MVCAL_3+
MVCAL_3-
DATA MULTIPLEXING
14
nQDATA3_[0..12]
QDATA3_[0..12]
nQDATA2_[0..12]
QDATA2_[0..12]
nQDATA1_[0..12]
QDATA1_[0..12]
nQDATA0_[0..12]
QDATA0_[0..12]
ICAL_EN
17
BYPASS CAPS
ARGONNE NATIONAL LABORATORY
HIGH ENERGY PHYSICS DIVISION
Title
MINOS MINDER - ROOT
Size
C
Document Number
PCB-1362
Rev
X7
Date: Wednesday, October 16, 2002
Sheet 1 of 17

MINDER BACKPLANE

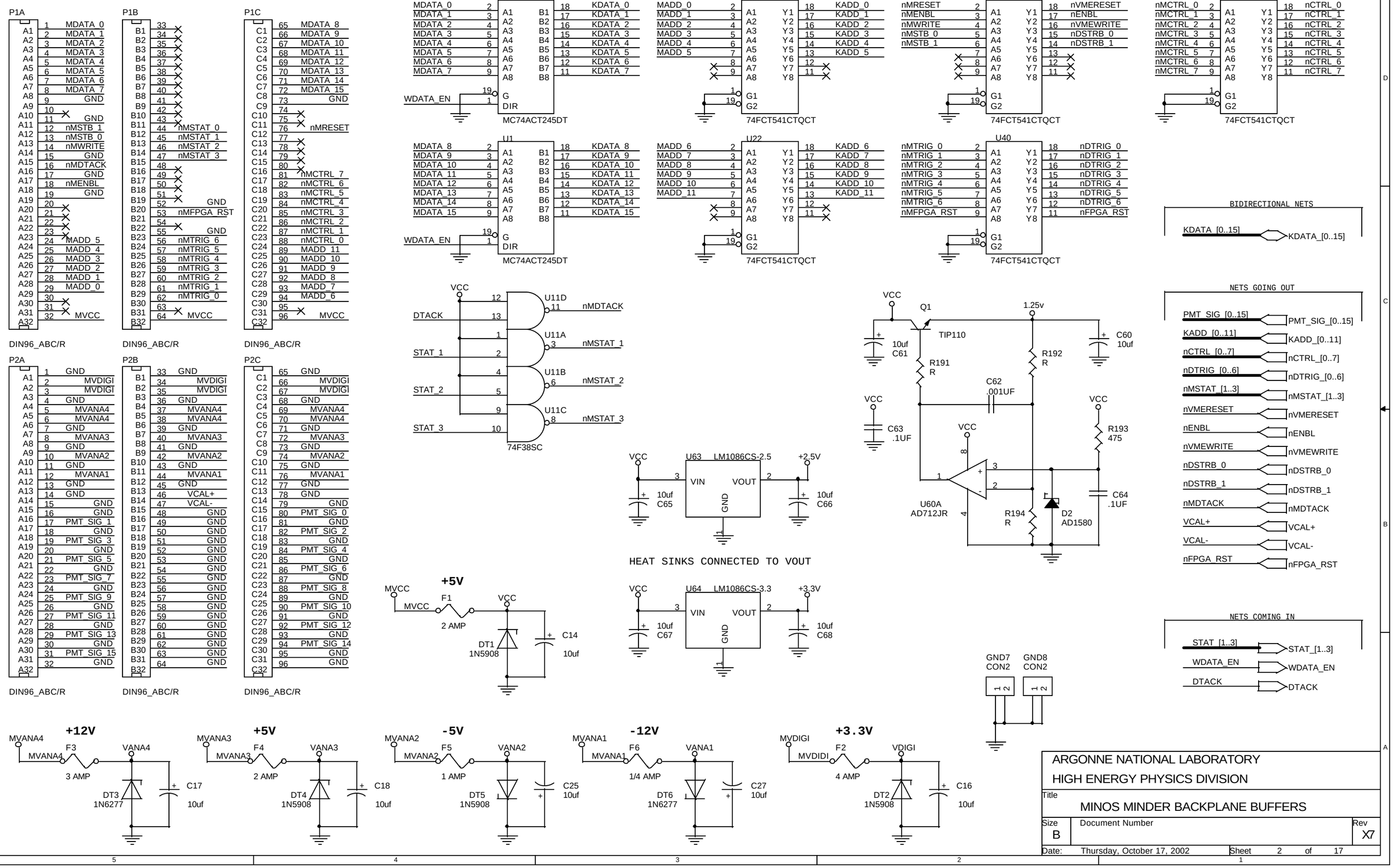

ARGONNE NATIONAL LABORATORY
HIGH ENERGY PHYSICS DIVISION

Title: MINOS MINDER BACKPLANE BUFFERS

Size: B | Document Number | Rev: X7

Date: Thursday, October 17, 2002 | Sheet 2 of 17

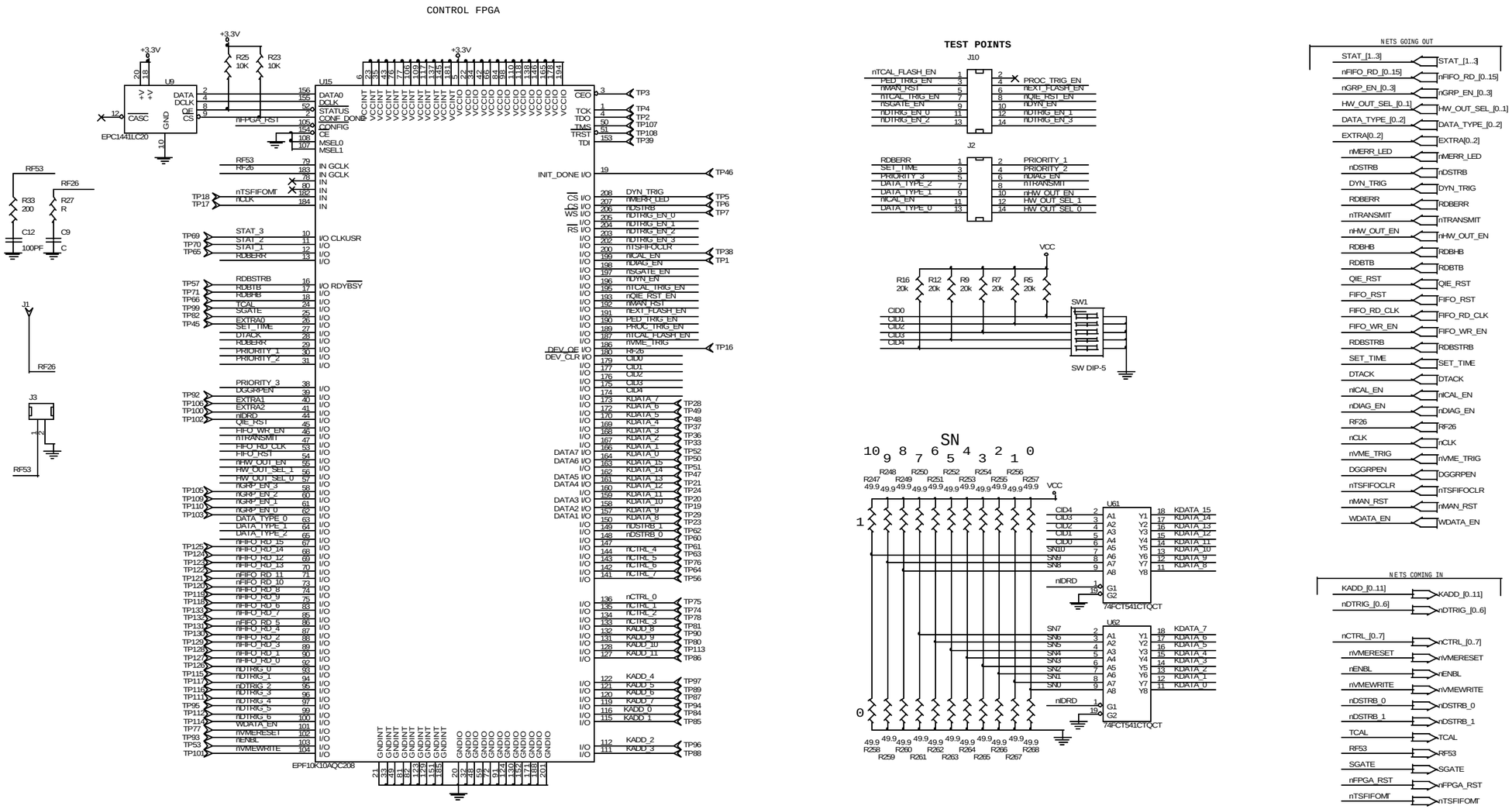

MODE	DATA TYPE
0	OFF
1	SPILL TRIG
2	COSMIC TRIG
3	FLASH TRIG
4	MANUAL TRIG
5	ICAL
6	TCAL
7	DIAGNOSTIC

ARGONNE NATIONAL LABORATORY

HIGH ENERGY PHYSICS DIVISION

Title: INTERFACE/SEQUENCER FPGA

Size: C | Document Number | Rev: X7

Date: Tuesday, October 22, 2002 | Sheet 3 of 17

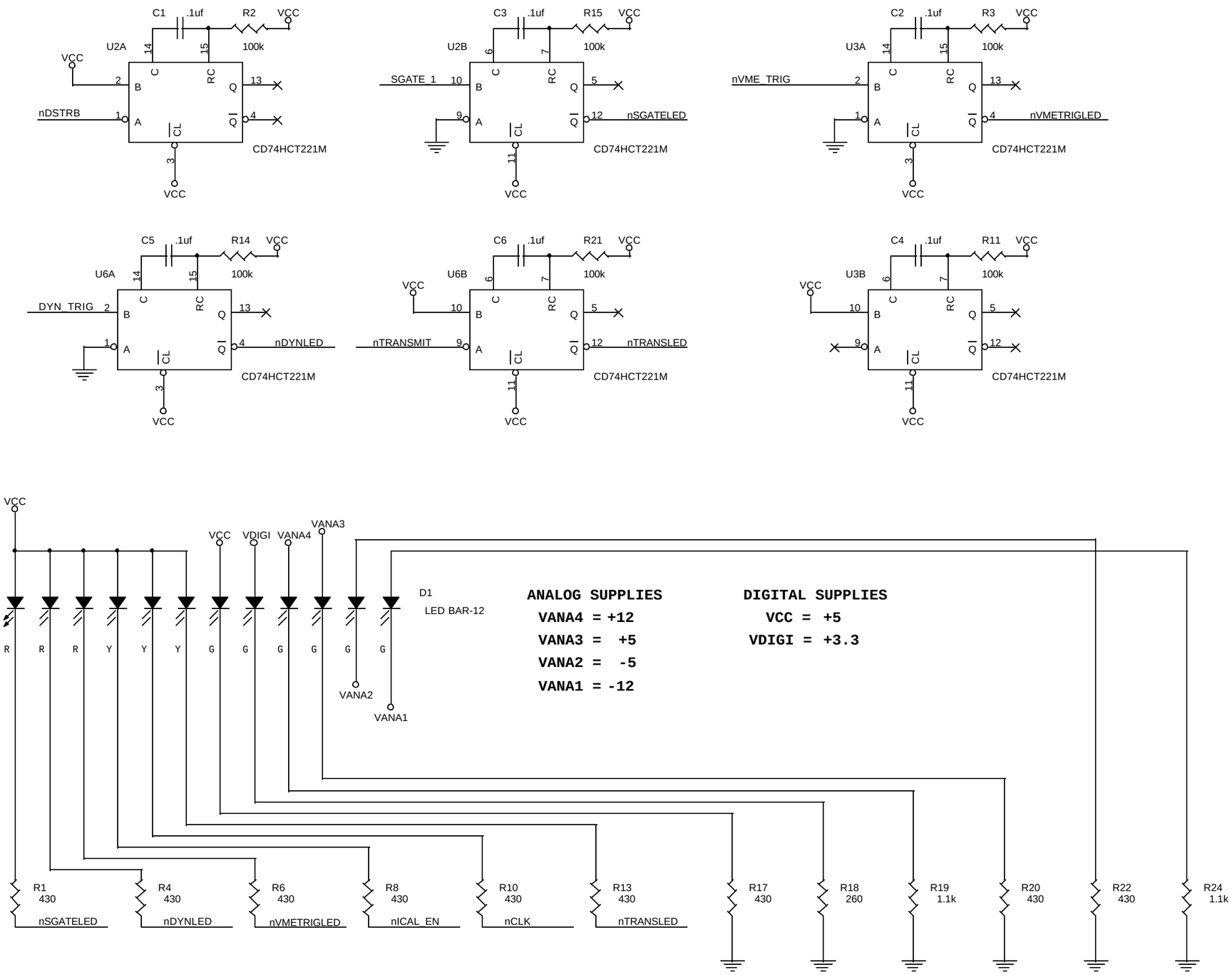

NETS GOING OUT

NONE

NETS COMING IN

SGATE_1 → SGATE_1
DYN_TRIG → DYN_TRIG
nDSTRB → nDSTRB
nTRANSMIT → nTRANSMIT
nICAL_EN → nICAL_EN
nCLK → nCLK
nVME_TRIG → nVME_TRIG

ARGONNE NATIONAL LABORATORY
HIGH ENERGY PHYSICS DIVISION

Title: FRONT PANEL INDICATORS

Size: B | Document Number | Rev: X7

Date: Thursday, September 26, 2002 | Sheet 4 of 17

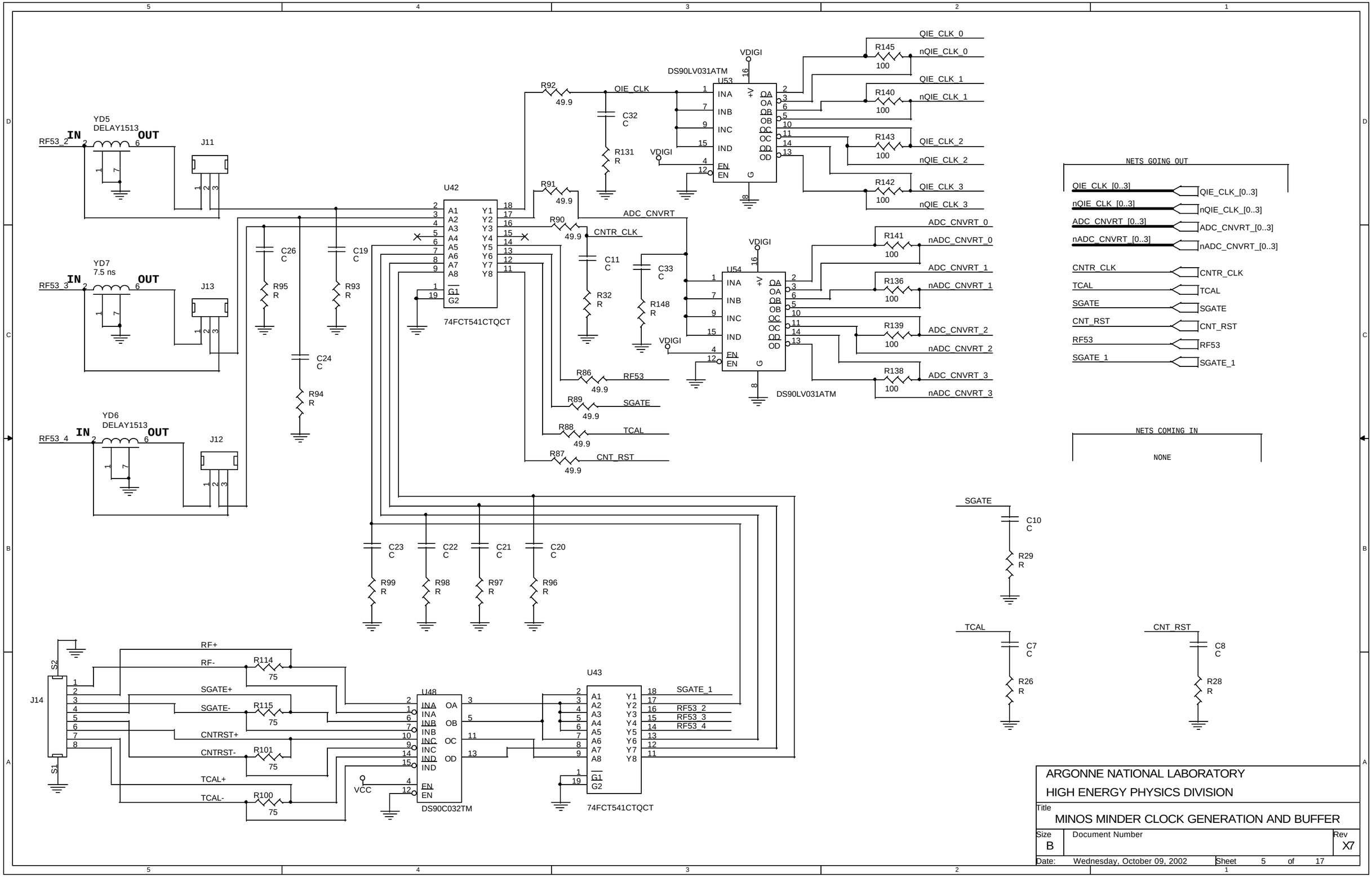

ARGONNE NATIONAL LABORATORY
HIGH ENERGY PHYSICS DIVISION

Title: MINOS MINDER CLOCK GENERATION AND BUFFER

Size	Document Number	Rev
B		X7

Date: Wednesday, October 09, 2002 Sheet 5 of 17

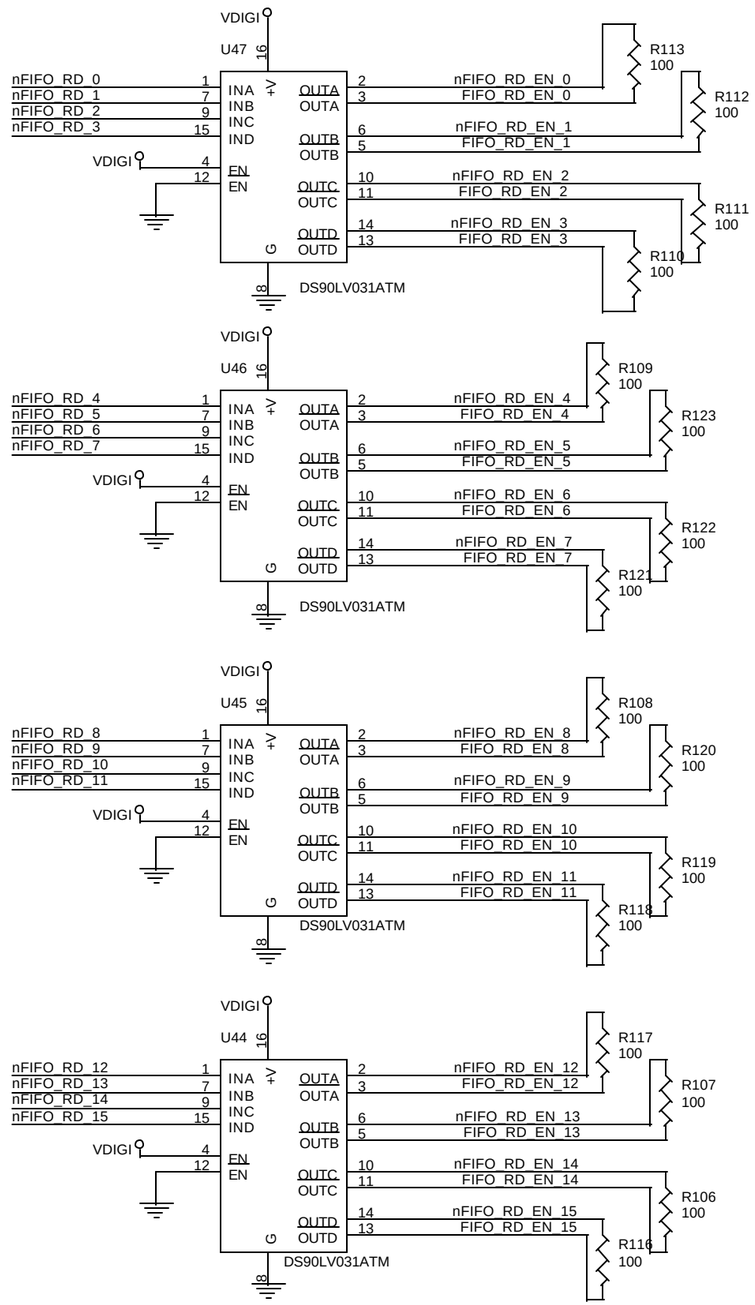

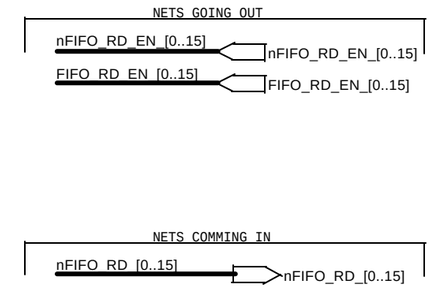

ARGONNE NATIONAL LABORATORY
HIGH ENERGY PHYSICS DIVISION

Title: OUTPUT CONTROL BUFFERS

Size	Document Number	Rev
B		X7

Date: Thursday, September 26, 2002 Sheet 6 of 17

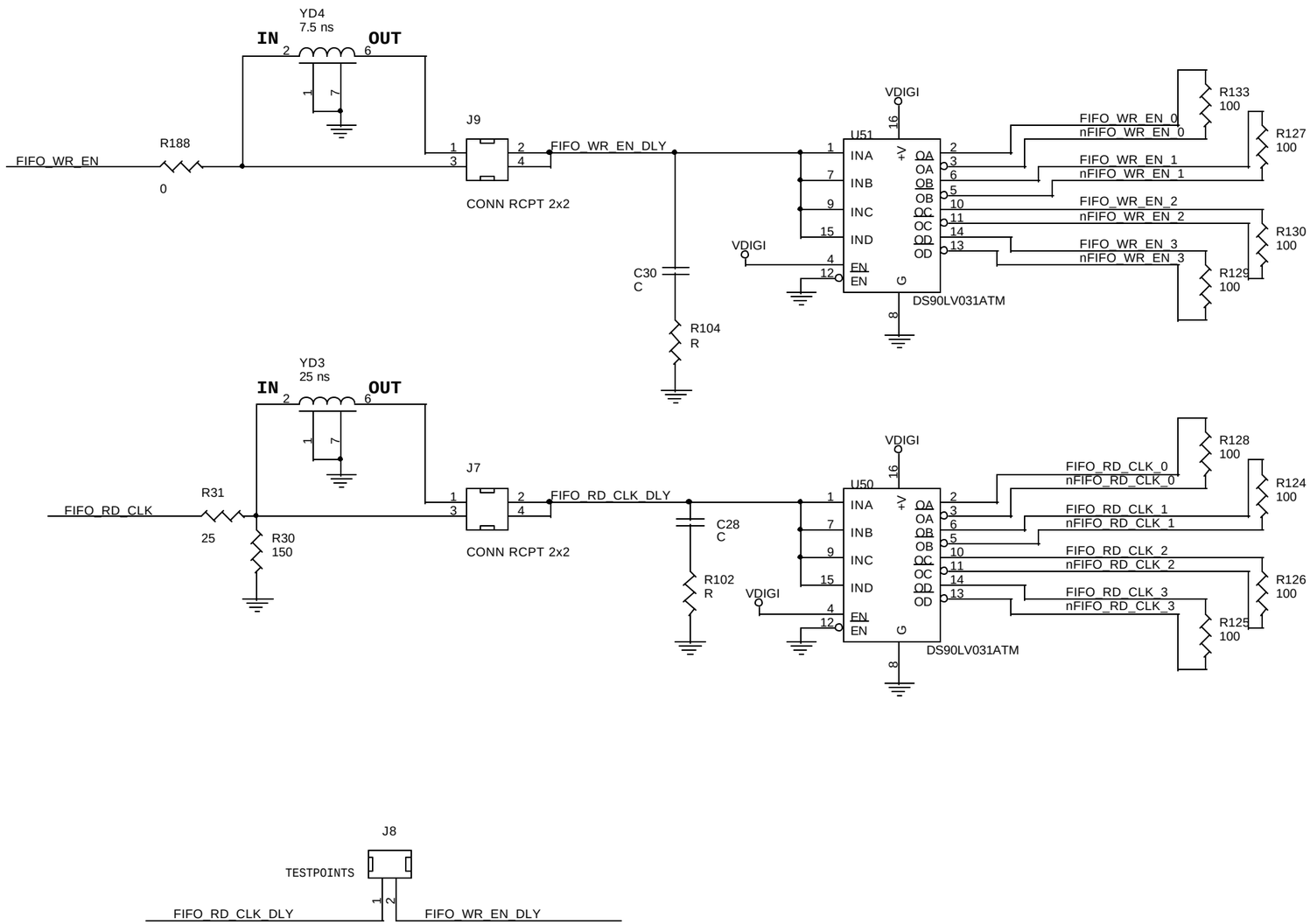

NETS GOING OUT

FIFO_WR_EN_[0..3] → FIFO_WR_EN_[0..3]
nFIFO_WR_EN_[0..3] → nFIFO_WR_EN_[0..3]
FIFO_RD_CLK_[0..3] → FIFO_RD_CLK_[0..3]
nFIFO_RD_CLK_[0..3] → nFIFO_RD_CLK_[0..3]

NETS COMING IN

FIFO_RD_CLK → FIFO_RD_CLK
FIFO_WR_EN → FIFO_WR_EN

ARGONNE NATIONAL LABORATORY
HIGH ENERGY PHYSICS DIVISION

Title: FIFO CONTROL DISTRIBUTION

Size	Document Number	Rev
B		X7

Date: Thursday, September 26, 2002 Sheet 7 of 17

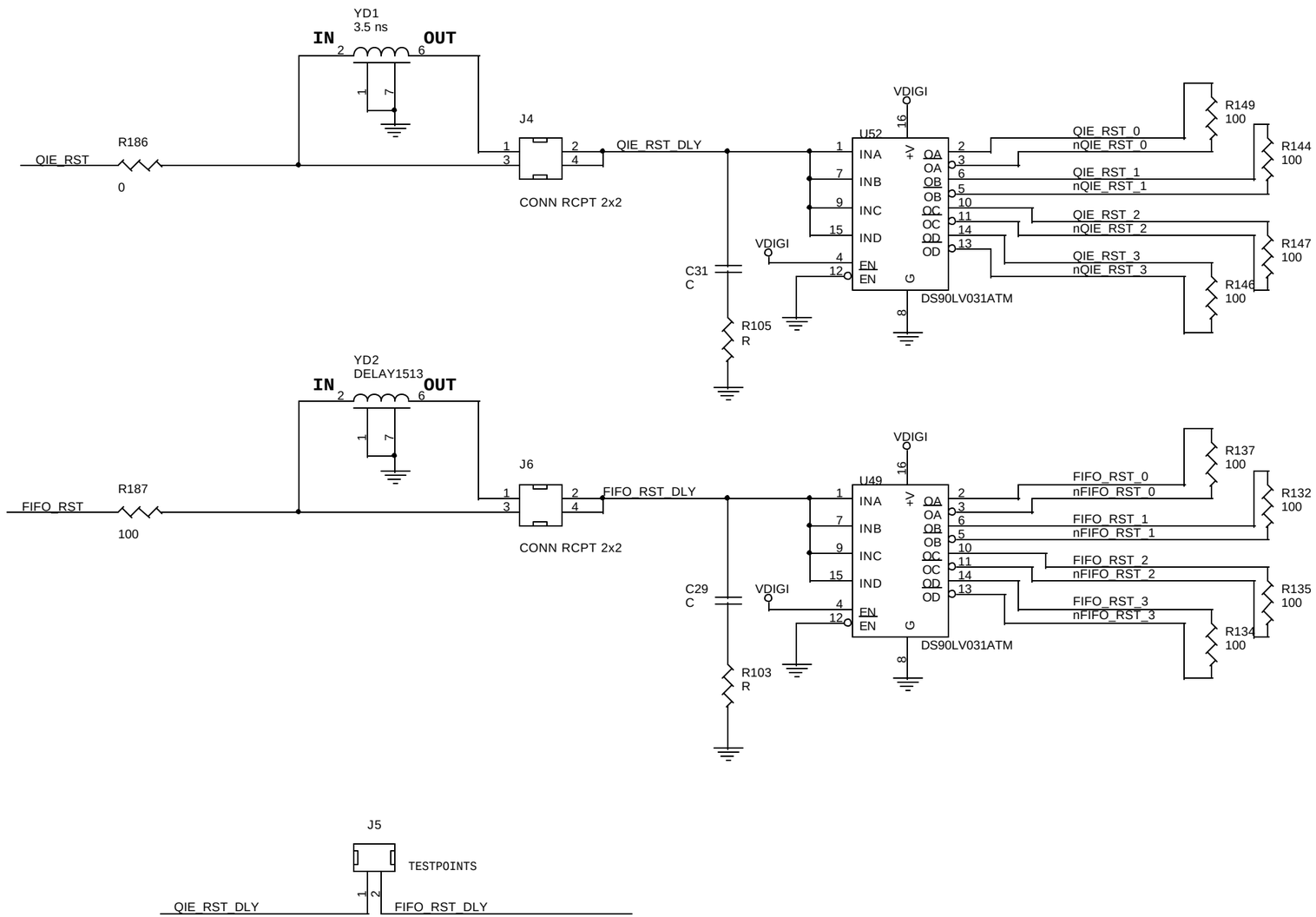

NETS GOING OUT

QIE_RST_[0..3] → QIE_RST_[0..3]
nQIE_RST_[0..3] → nQIE_RST_[0..3]
FIFO_RST_[0..3] → FIFO_RST_[0..3]
nFIFO_RST_[0..3] → nFIFO_RST_[0..3]

NETS COMING IN

QIE_RST → QIE_RST
FIFO_RST → FIFO_RST

ARGONNE NATIONAL LABORATORY
HIGH ENERGY PHYSICS DIVISION

Title: RESET DISTRIBUTION

Size	Document Number	Rev
B		X7

Date: Thursday, September 26, 2002 Sheet 8 of 17

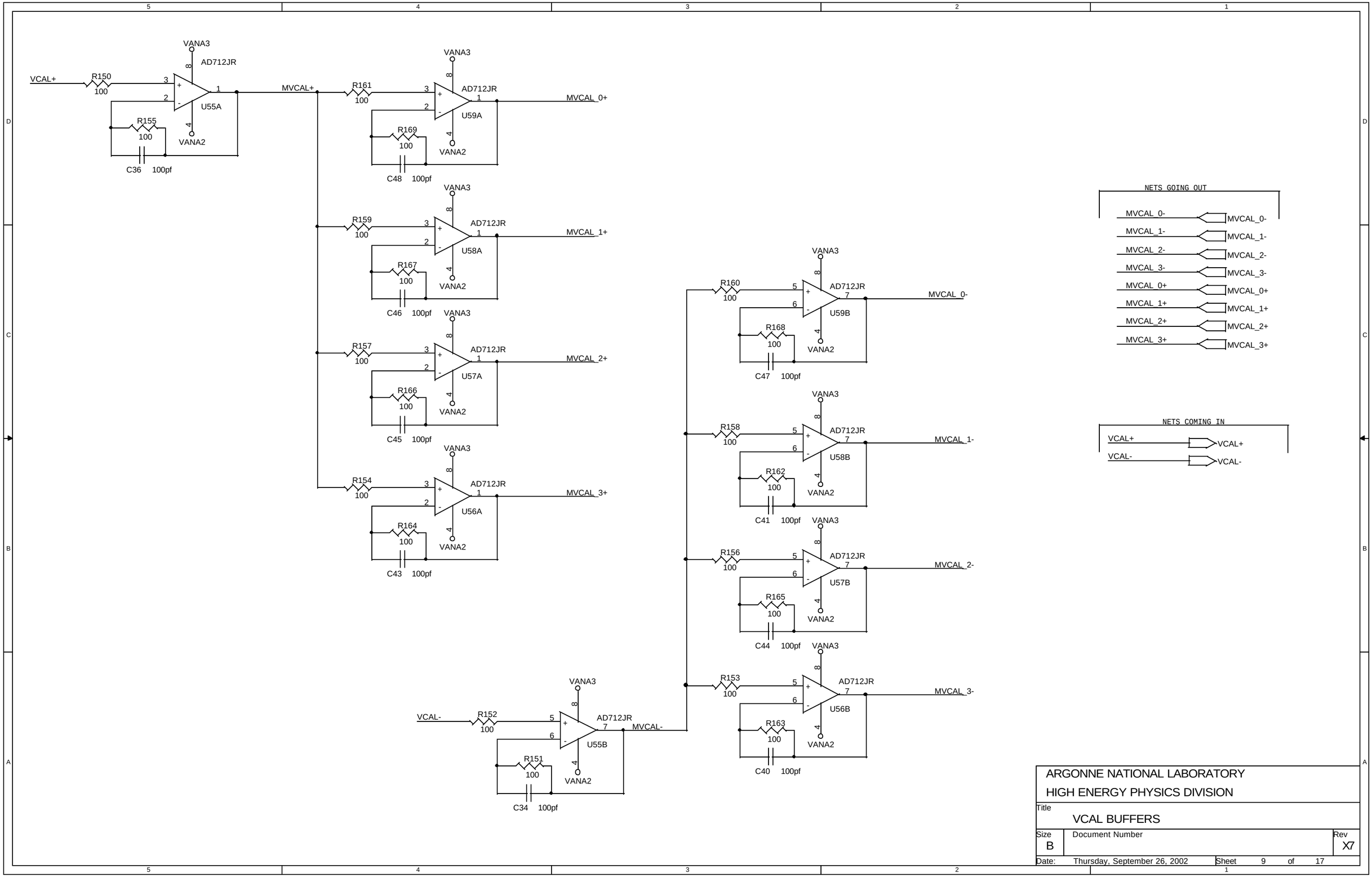

ARGONNE NATIONAL LABORATORY
HIGH ENERGY PHYSICS DIVISION

Title: VCAL BUFFERS		
Size: B	Document Number	Rev: X7
Date: Thursday, September 26, 2002	Sheet 9 of 17	

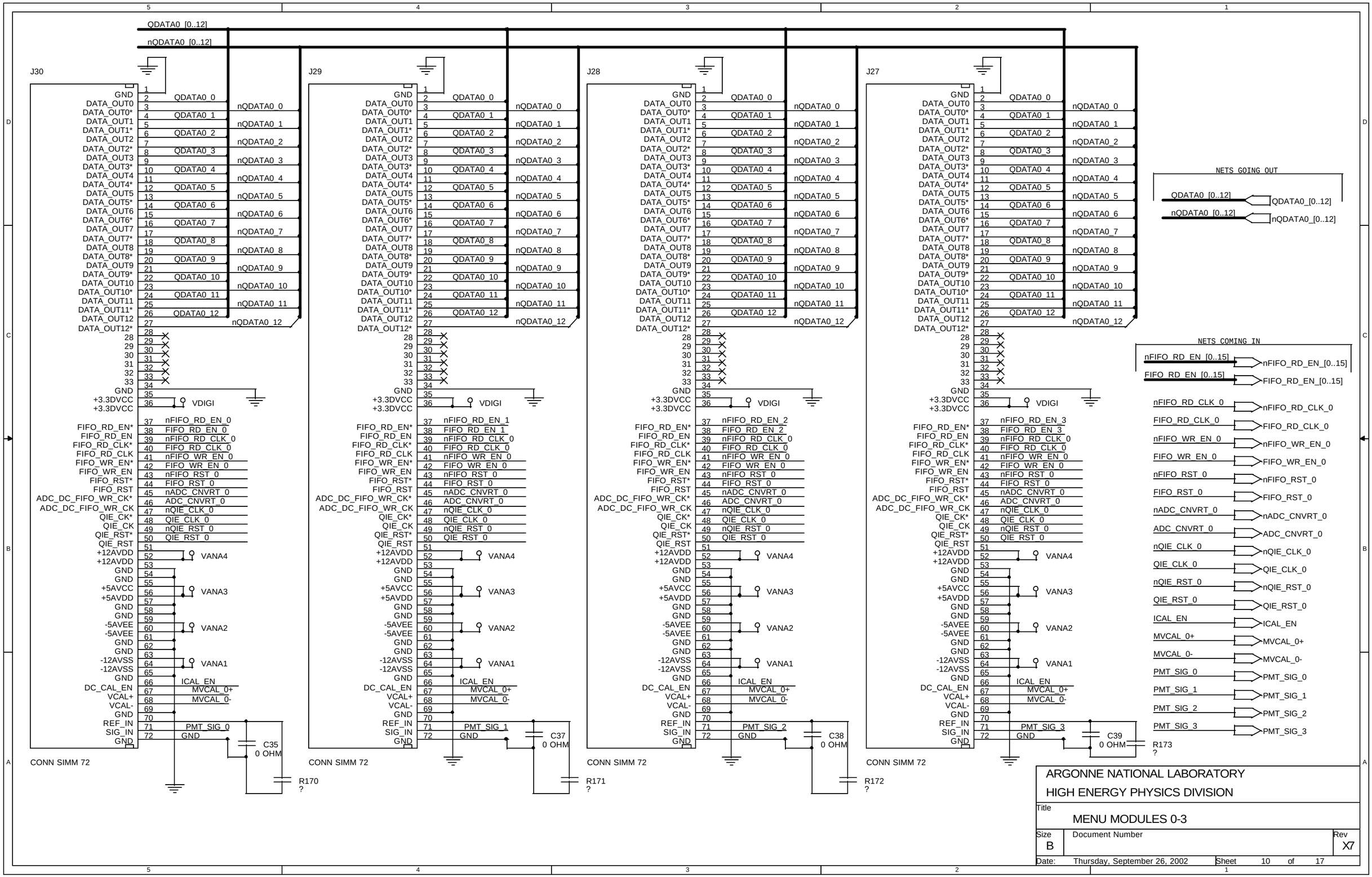
QDATA0_[0..12]
nQDATA0_[0..12]
J30
J29
J28
J27
CONN SIMM 72
VDIGI
VANA4
VANA3
VANA2
VANA1
C35
0 OHM
R170
?
C37
0 OHM
R171
?
C38
0 OHM
R172
?
C39
0 OHM
R173
?
NETS GOING OUT
NETS COMING IN
ARGONNE NATIONAL LABORATORY
HIGH ENERGY PHYSICS DIVISION
Title
MENU MODULES 0-3
Size
B
Document Number
Rev
X7
Date: Thursday, September 26, 2002
Sheet 10 of 17

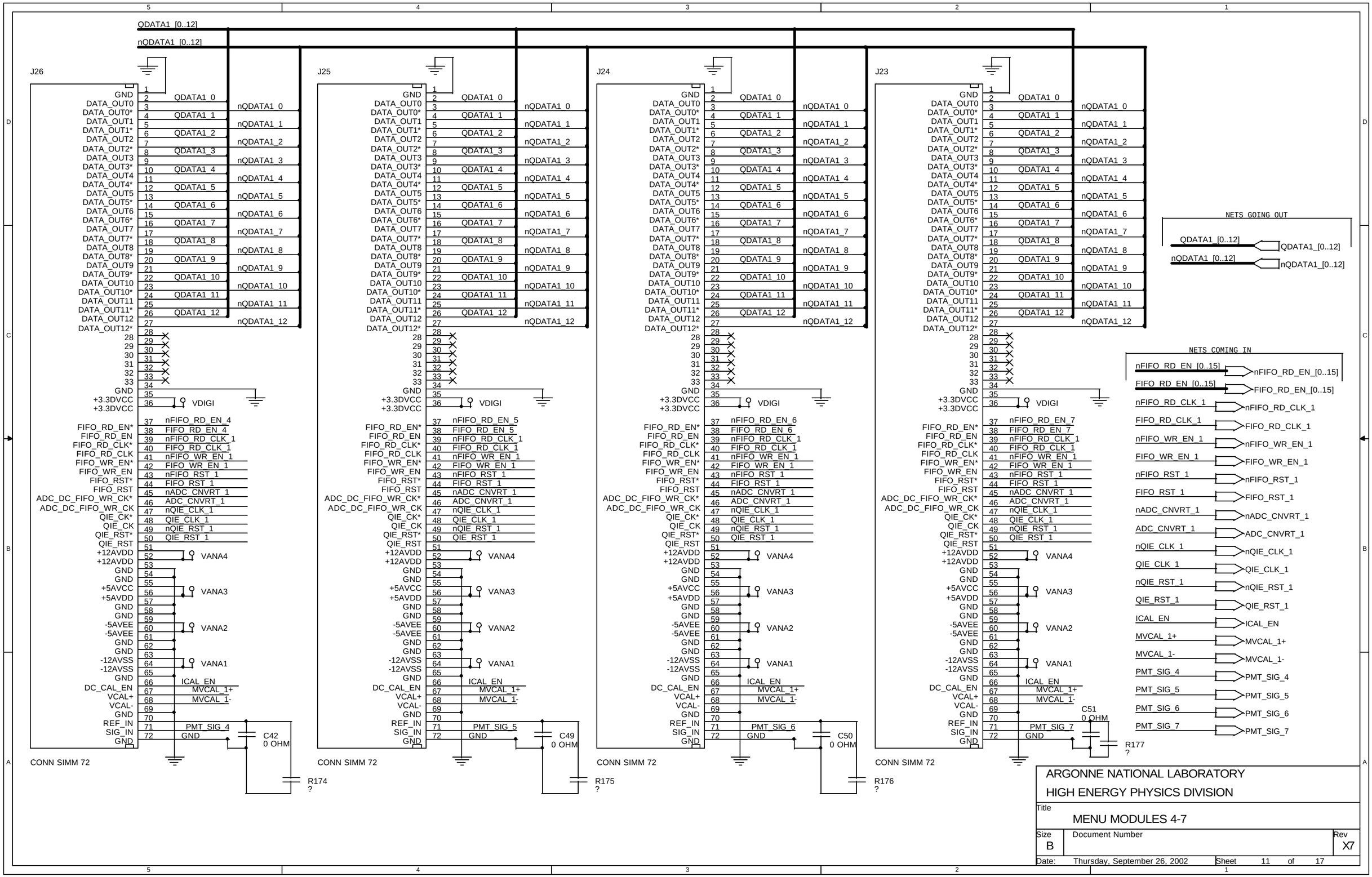

ARGONNE NATIONAL LABORATORY
HIGH ENERGY PHYSICS DIVISION

Title: MENU MODULES 4-7

Size: B | Document Number | Rev: X7

Date: Thursday, September 26, 2002 | Sheet 11 of 17

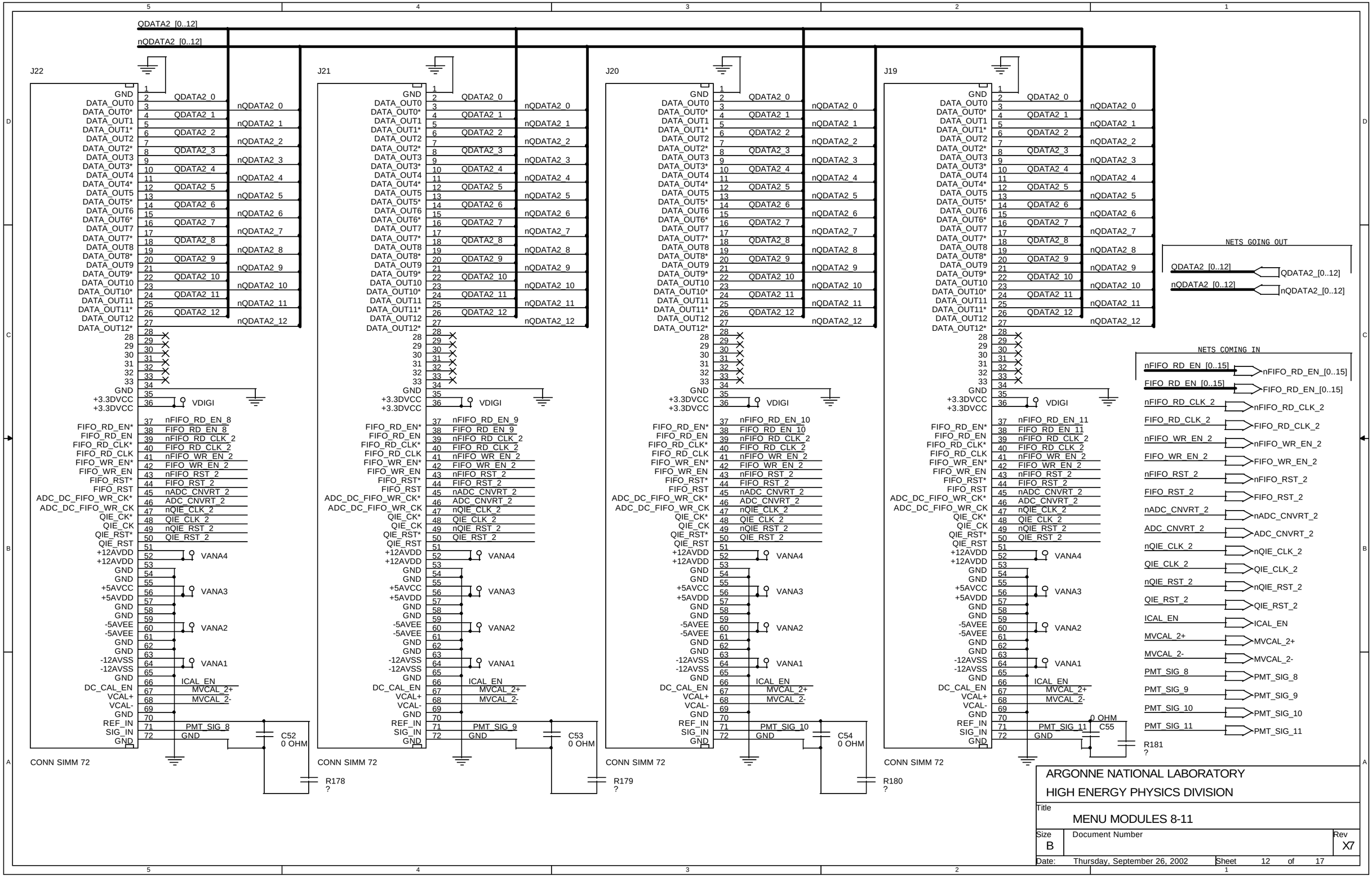
QDATA2_[0..12]
nQDATA2_[0..12]
J22
J21
J20
J19
CONN SIMM 72
C52
0 OHM
R178
?
C53
0 OHM
R179
?
C54
0 OHM
R180
?
C55
0 OHM
R181
?
NETS GOING OUT
QDATA2_[0..12]
nQDATA2_[0..12]
NETS COMING IN
nFIFO_RD_EN_[0..15]
FIFO_RD_EN_[0..15]
nFIFO_RD_CLK_2
FIFO_RD_CLK_2
nFIFO_WR_EN_2
FIFO_WR_EN_2
nFIFO_RST_2
FIFO_RST_2
nADC_CNVRT_2
ADC_CNVRT_2
nQIE_CLK_2
QIE_CLK_2
nQIE_RST_2
QIE_RST_2
ICAL_EN
MVCAL_2+
MVCAL_2-
PMT_SIG_8
PMT_SIG_9
PMT_SIG_10
PMT_SIG_11
ARGONNE NATIONAL LABORATORY
HIGH ENERGY PHYSICS DIVISION
Title
MENU MODULES 8-11
Size
B
Document Number
Rev
X7
Date: Thursday, September 26, 2002
Sheet 12 of 17

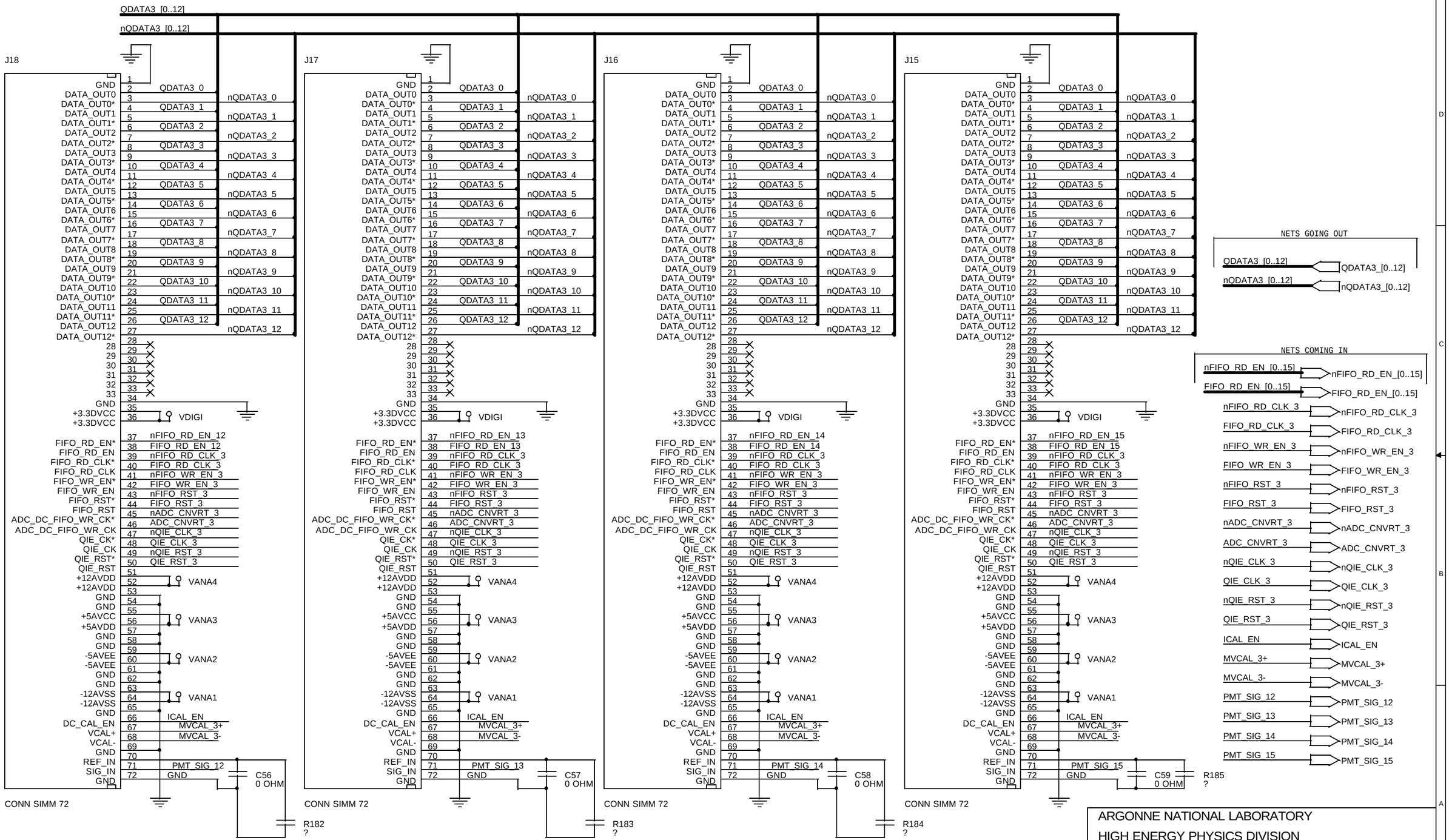

ARGONNE NATIONAL LABORATORY
HIGH ENERGY PHYSICS DIVISION

Title: MENU MODULES 12-15

Size: B | Document Number | Rev: X7

Date: Thursday, September 26, 2002 | Sheet 13 of 17

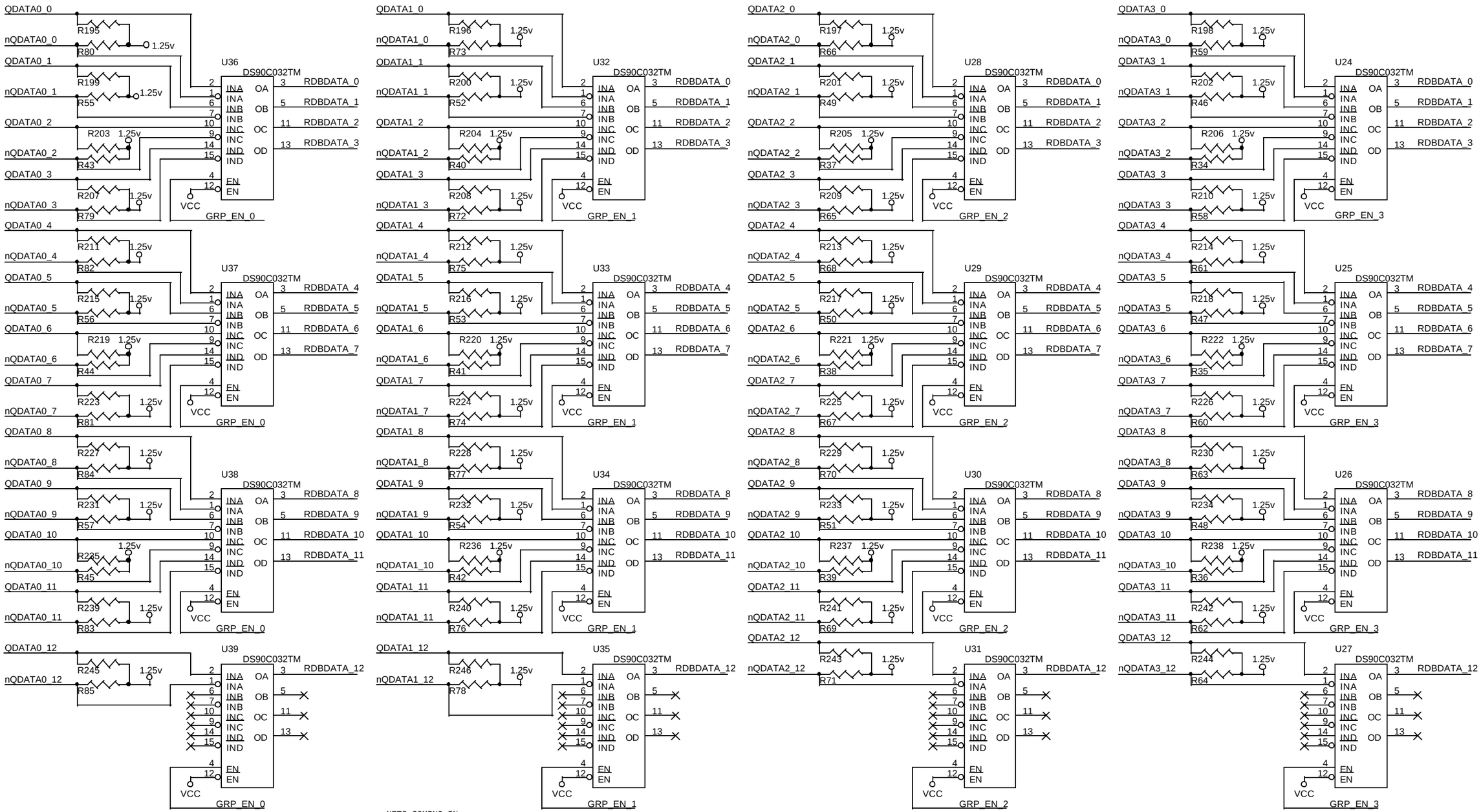

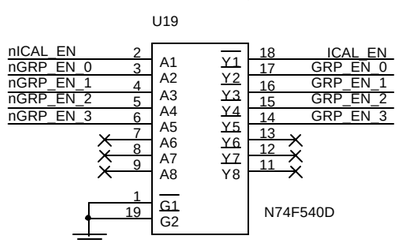

NETS COMING IN

nICAL_EN	nICAL_EN
nGRP_EN_[0..3]	nGRP_EN_[0..3]
QDATA0_[0..12]	QDATA0_[0..12]
nQDATA0_[0..12]	nQDATA0_[0..12]
QDATA1_[0..12]	QDATA1_[0..12]
nQDATA1_[0..12]	nQDATA1_[0..12]
QDATA2_[0..12]	QDATA2_[0..12]
nQDATA2_[0..12]	nQDATA2_[0..12]
QDATA3_[0..12]	QDATA3_[0..12]
nQDATA3_[0..12]	nQDATA3_[0..12]

NETS GOING OUT

RDBDATA_[0..12]	RDBDATA_[0..12]
ICAL_EN	ICAL_EN

ARGONNE NATIONAL LABORATORY
HIGH ENERGY PHYSICS DIVISION

Title: DATA MULTIPLEXING

Size	Document Number	Rev
B		X7

Date: Wednesday, October 09, 2002 Sheet 14 of 17

DATA FPGA

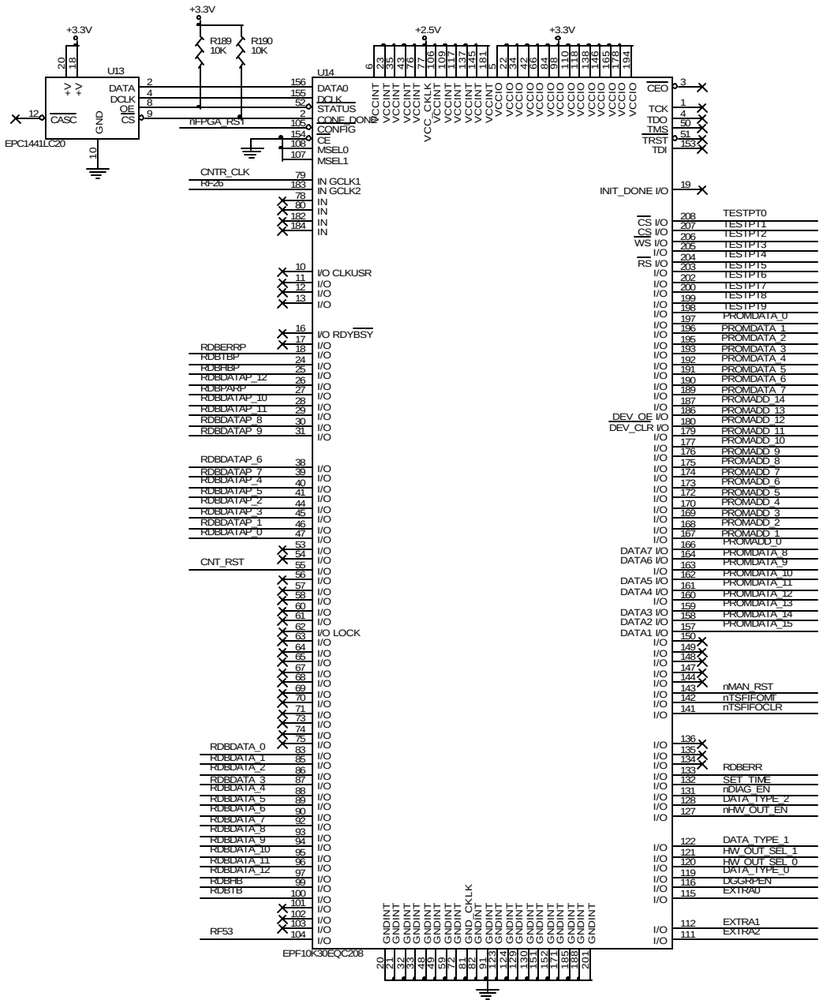

TEST POINTS

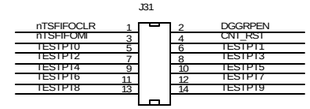

DIAGNOSTIC PROMs

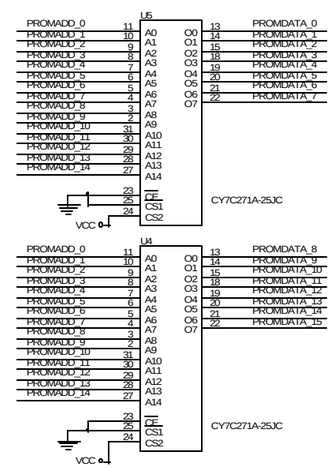

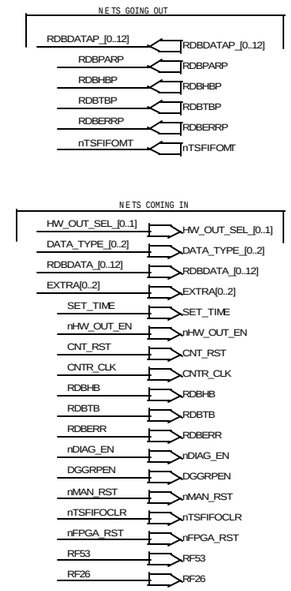

ARGONNE NATIONAL LABORATORY
HIGH ENERGY PHYSICS DIVISION

Title: TIME STAMP, DIAGNOSTIC, & PARITY FPGA

Size	Document Number	Rev
C		X7

Date: Thursday, October 17, 2002 Sheet 15 of 17

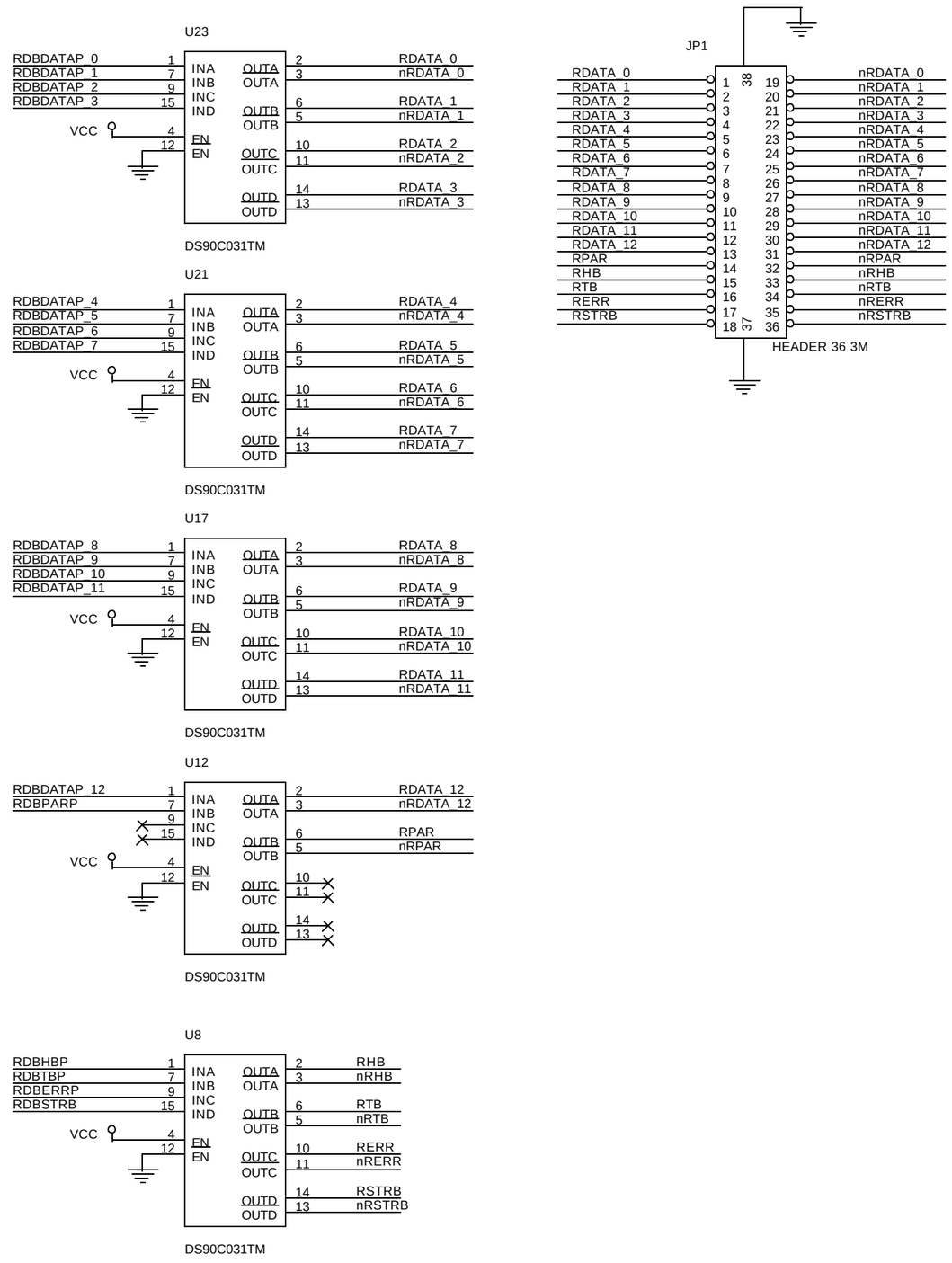

ARGONNE NATIONAL LABORATORY

HIGH ENERGY PHYSICS DIVISION

Title: OUTPUT DATA DRIVERS

Size	Document Number	Rev
B		X7

Date: Thursday, September 26, 2002 Sheet 16 of 17

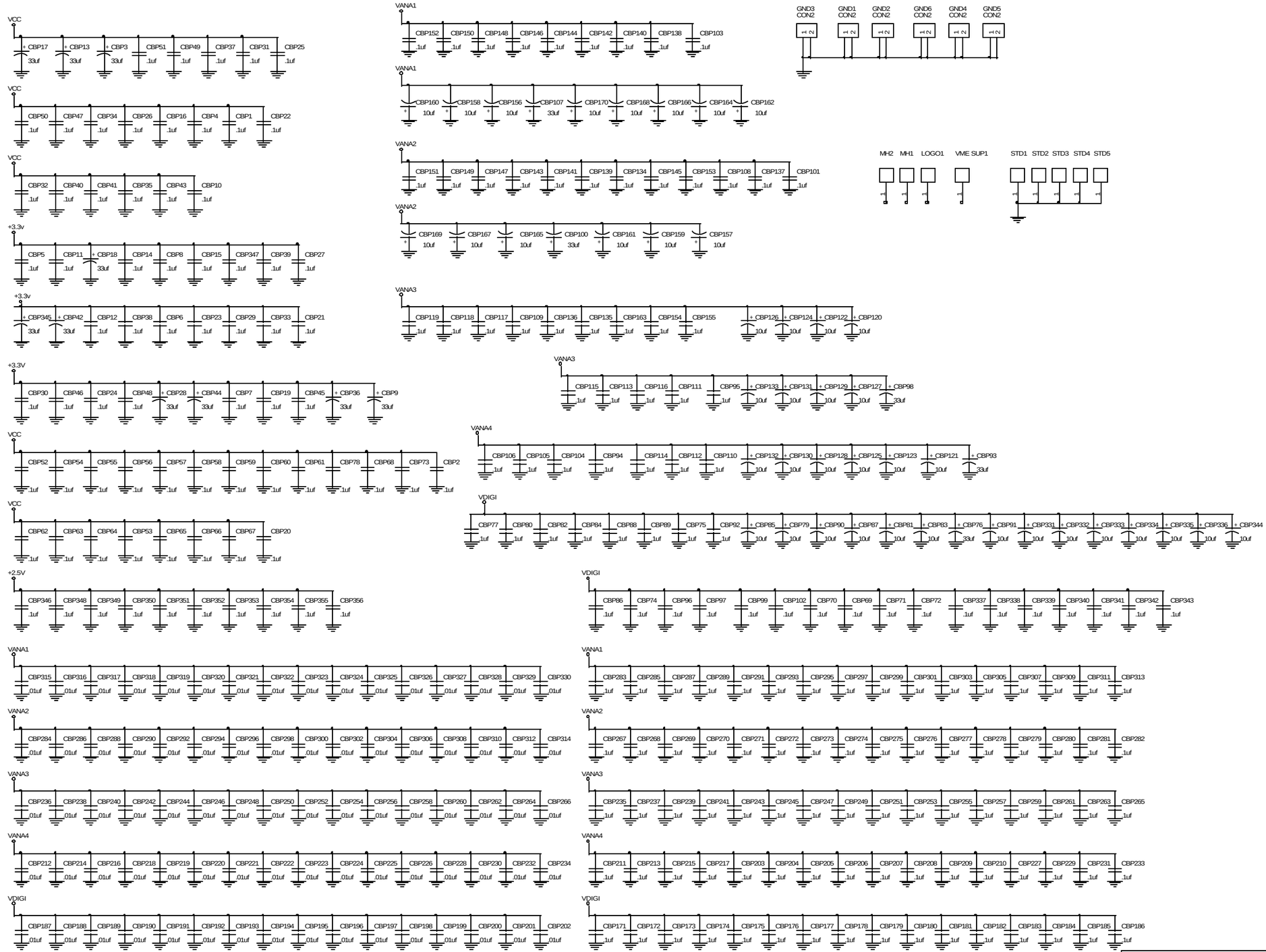

ARGONNE NATIONAL LABORATORY
HIGH ENERGY PHYSICS DIVISION

Title: BYPASS CAPS

Size	Document Number	Rev
C		X7

Date: Thursday, October 17, 2002 Sheet 17 of 17