MINDER BACKPLANE
96 pin VME

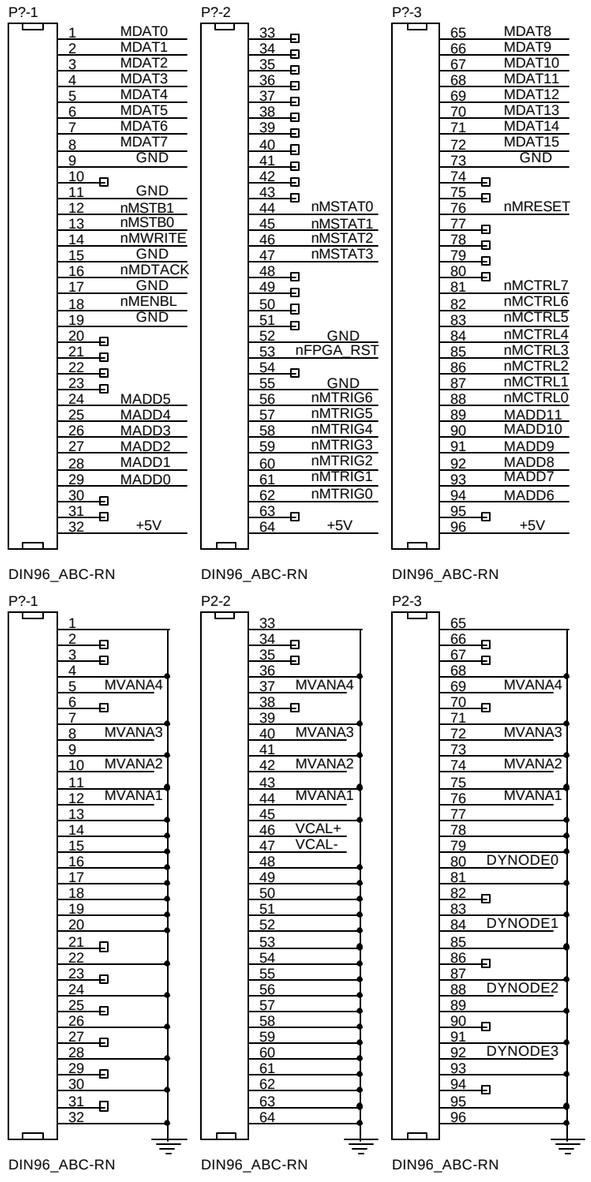

FROM MASTER CARD

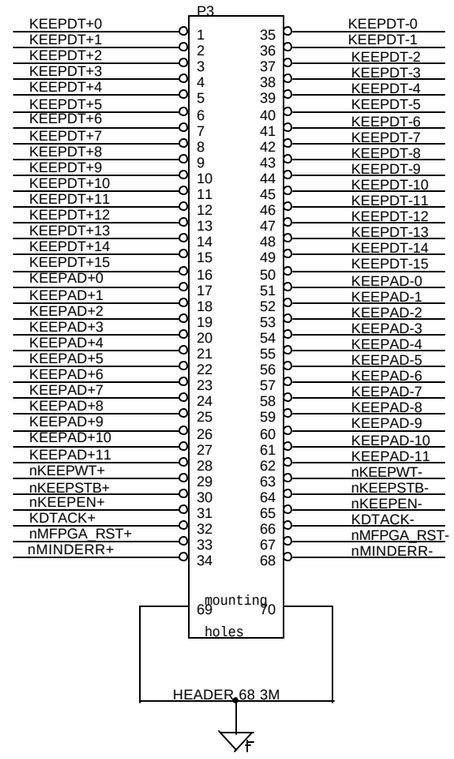

CABLE TO 'BEFORE' CRATE

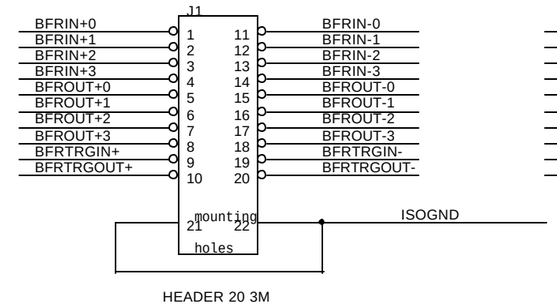

CABLE TO 'AFTER' CRATE

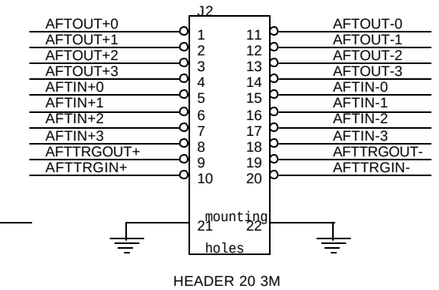

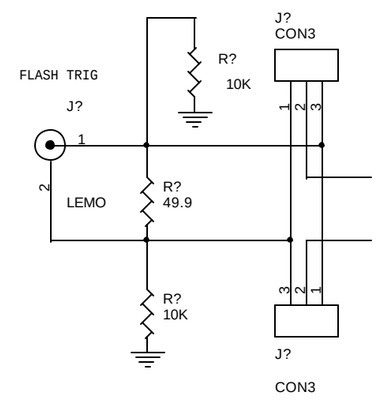

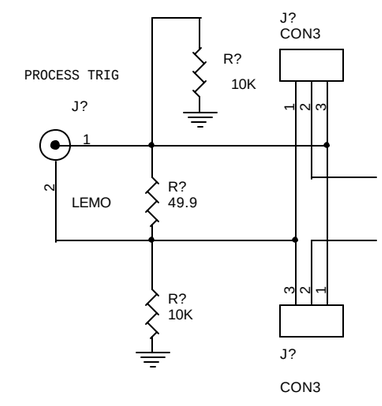

FROM TIMING MODULE

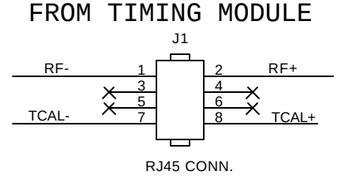

Title: Trigger Keeper Connector pinouts		
Size: B	Document Number: Connector pinouts	Rev: <RevCode>
Date: Wednesday, October 30, 2002	Sheet 1 of 1	