THIS DRAWING IS UNPUBLISHED. RELEASED FOR PUBLICATION ,19 .
© COPYRIGHT 19 BY AMP INCORPORATED. ALL RIGHTS RESERVED.

LOC	DIST
AA	22

REVISIONS

P	LTR	DESCRIPTION	DATE	DWN	APVD
	C	REVISED; EC 0U1C-0089-00	17MAY00	DLD	CMB

1. MATERIAL: HOUSING - HIGH TEMPERATURE NYLON, BLACK, UL 94V-0, IR COMPATIBLE.
TERMINALS: 0.36 [.014] THICK PHOS BRONZE PLATED WITH 3.81µm [.000150] MINIMUM THICK BRIGHT TIN-LEAD IN SOLDER AREA, 1.27µm [.000050] MINIMUM GOLD IN LOCALIZED PLATE AREA. ENTIRE TERMINAL PLATED WITH 1.27µm [.000050] MINIMUM THICK NICKEL.
SHIELDS - 0.25 [.0098] THICK COPPER ZINC ALLOY, PREPLATED WITH 2.03µm-3.81µm [.000080-.000150] THICK TIN LEAD OVER 2.54 [.000100] THICK COPPER.

2. JACK CAVITY CONFORMS TO FCC RULES AND REGULATIONS PART 68, SUBPART F.

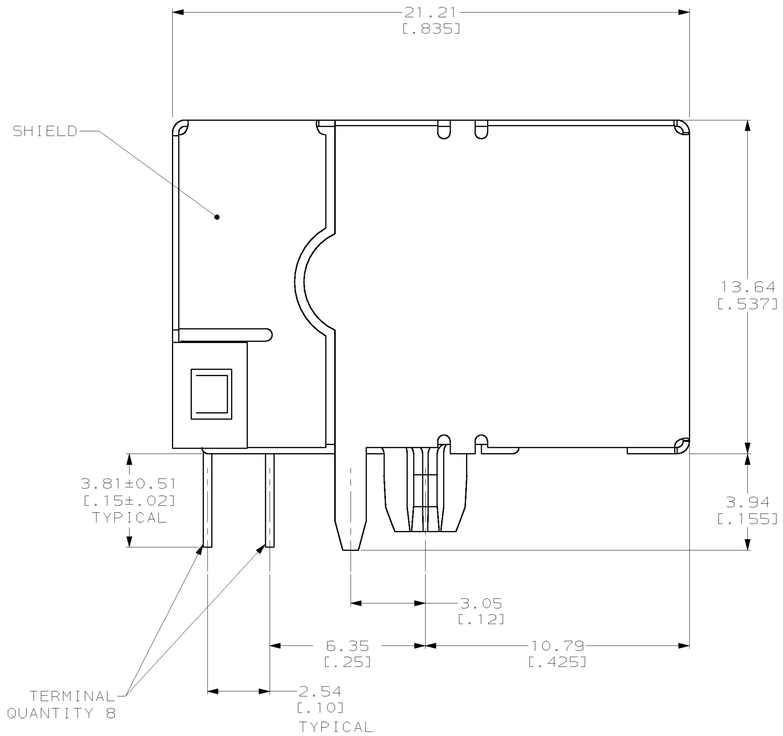

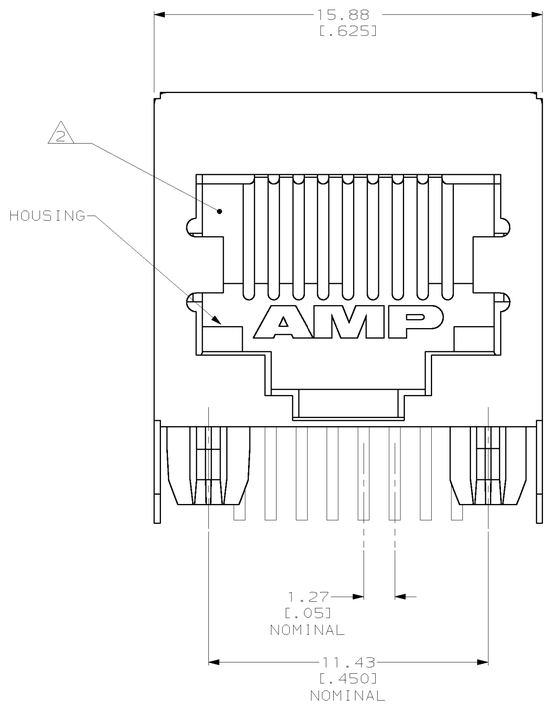

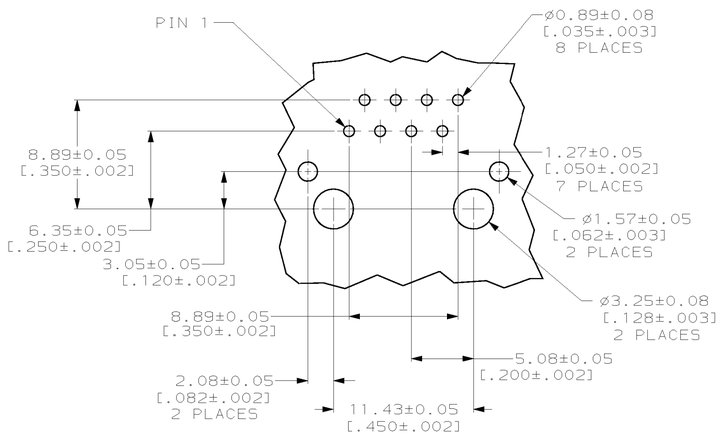

SUGGESTED PRINTED CIRCUIT
BOARD LAYOUT
COMPONENT SIDE
SCALE 4:1

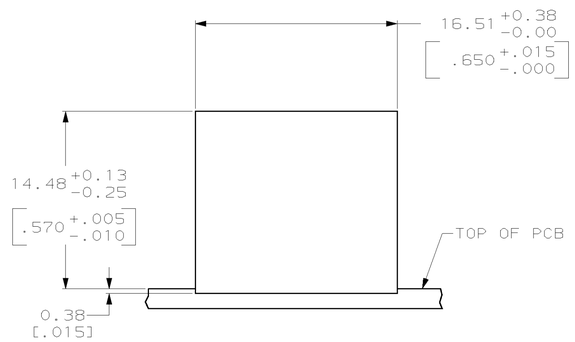

SUGGESTED PANEL CUTOUT
SCALE 4:1

406017-1
PART NUMBER

THIS DRAWING IS A CONTROLLED DOCUMENT FOR AMP INCORPORATED. IT IS SUBJECT TO CHANGE AND THE CONTROLLING ENGINEERING ORGANIZATION SHOULD BE CONTACTED FOR THE LATEST REVISION.

DIMENSIONS: mm [INCHES]

TOLERANCES UNLESS OTHERWISE SPECIFIED:
0 PLC ±-
1 PLC ±-
2 PLC ±0.25 [.01]
3 PLC ±0.13 [.005]
4 PLC ±-
ANGLES ±-

MATERIAL 1
FINISH 1

DWN DL DRUMMOND 05 SEP 96
CHK C. WHITT 12 SEP 96
APVD M. DERSTINE 19 SEP 96
PRODUCT SPEC —
APPLICATION SPEC —
WEIGHT —
CUSTOMER DRAWING

AMP Incorporated
Harrisburg, PA 17105-3608

NAME
MODULAR JACK ASSEMBLY,
8 POSITION,
PRINTED CIRCUIT BOARD GROUND

SIZE	CAGE CODE	DRAWING NO
A1	00779	C-406017

SCALE	SHEET	OF	REV
8:1	1	1	C