FOR USE WITH THE SCHROFF 23000-042 BACKPLANE

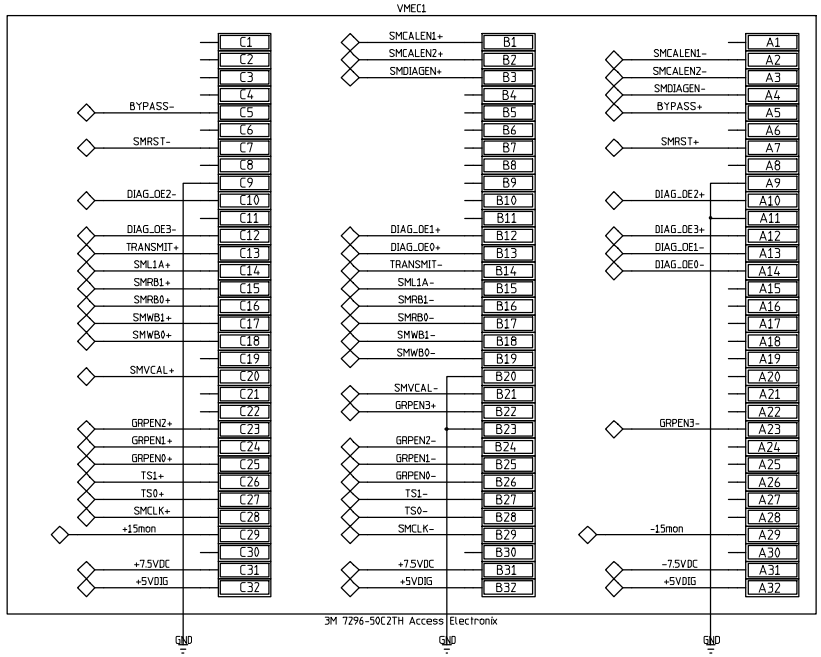

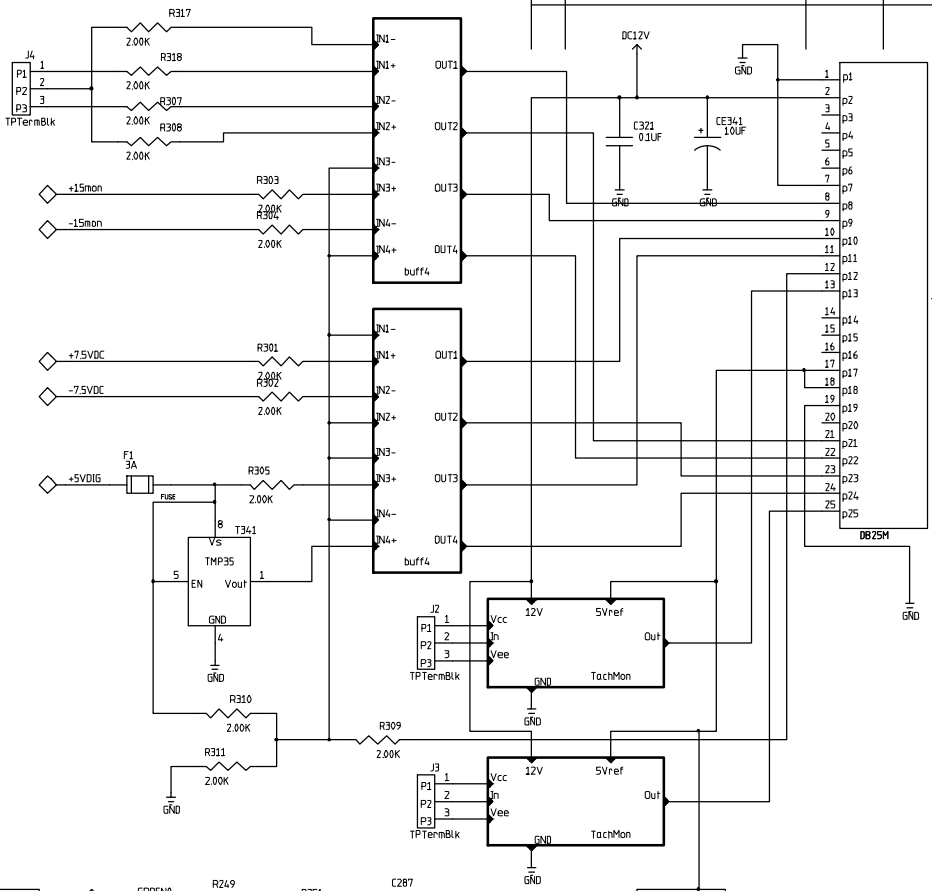

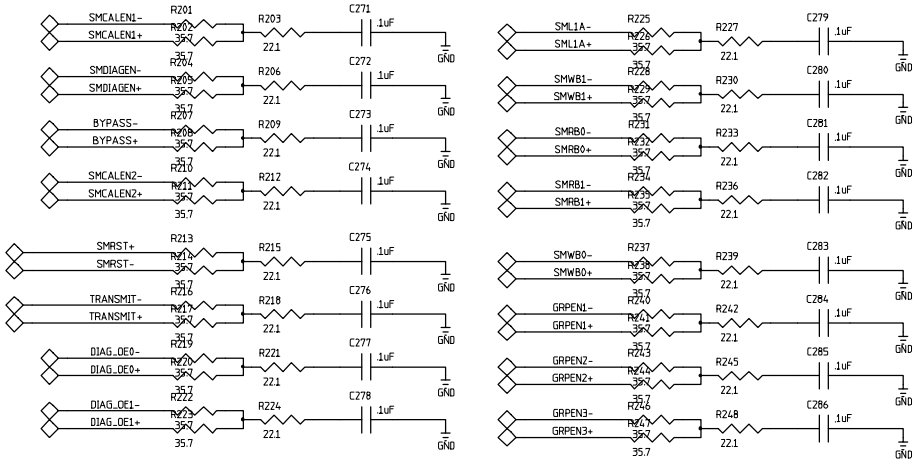

REVISIONS			
REV	DESCRIPTION	DATE	APPROVED

CONTRACT NO.	
APPROVALS / DATE	SMDTERM (1)
DRAWN Jinyuan Wu 06/22/99	
CHECKED	
ISSUED	SIZE C · FSCM NO. · DWG. NO. SMDTERM01 · REV
	SCALE · SHEET 1 of 5

H=4ND; V=4LA

REVISIONS			
REV	DESCRIPTION	DATE	APPROVED

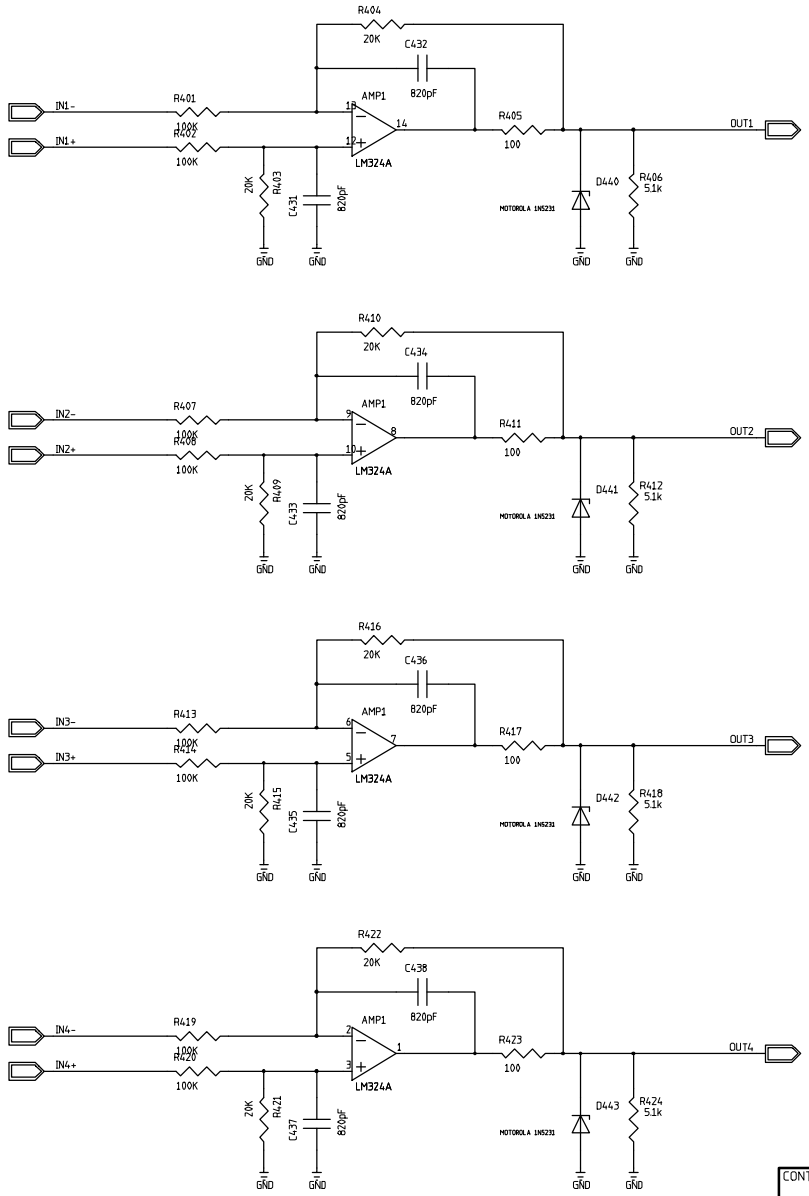

CONTRACT NO.			
APPROVALS	DATE	BUFF4	
DRAWN Jhyuan Wu	06/22/99		
CHECKED		SIZE C / FSCM NO. / DWG. NO. SMDTERM03	REV
ISSUED		SCALE	SHEET 2 (or 3) of 5

DWG. NO.
SH.
REV

REVISIONS			
REV	DESCRIPTION	DATE	APPROVED

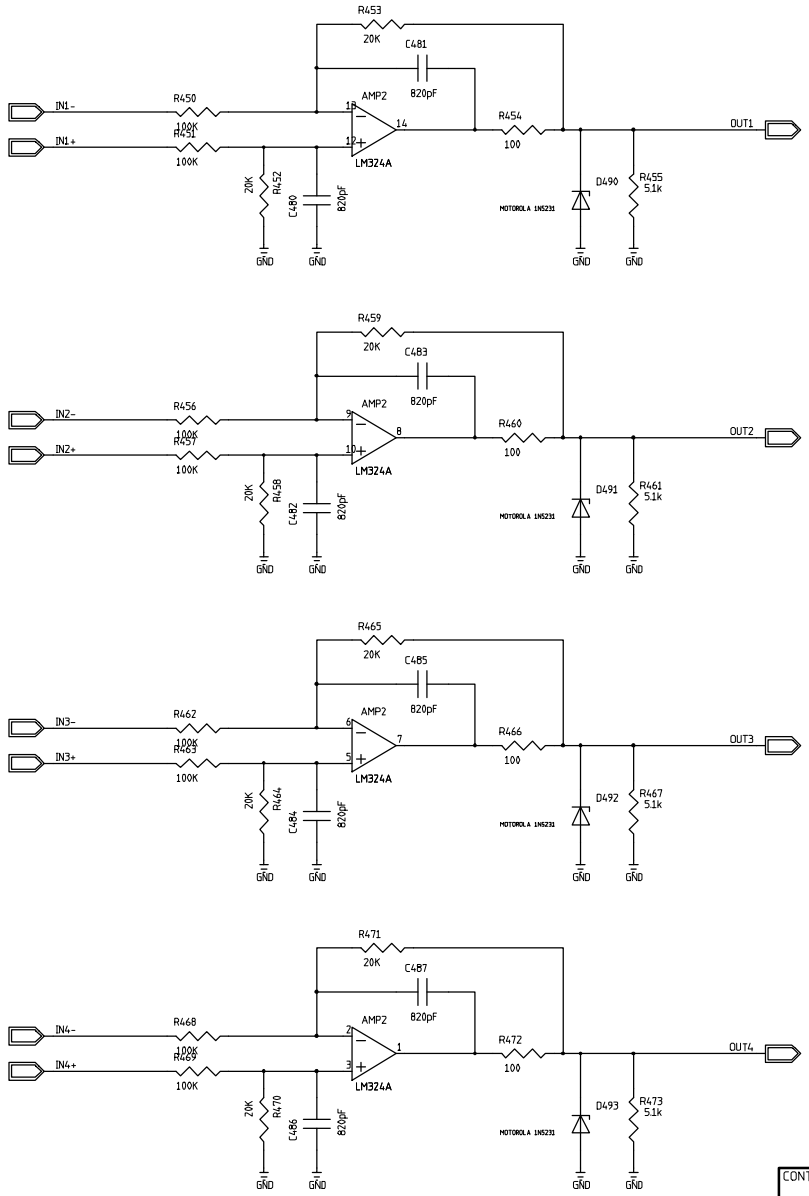

CONTRACT NO.			
APPROVALS	DATE	BUFF4	
DRAWN Jhyuan Wu	06/22/99		
CHECKED		SIZE C / FSCM NO. / DWG. NO. SMDTERM03	REV
ISSUED		SCALE	SHEET 2 (or 3) of 5

DWG NO. SH REV

REVISIONS			
REV	DESCRIPTION	DATE	APPROVED

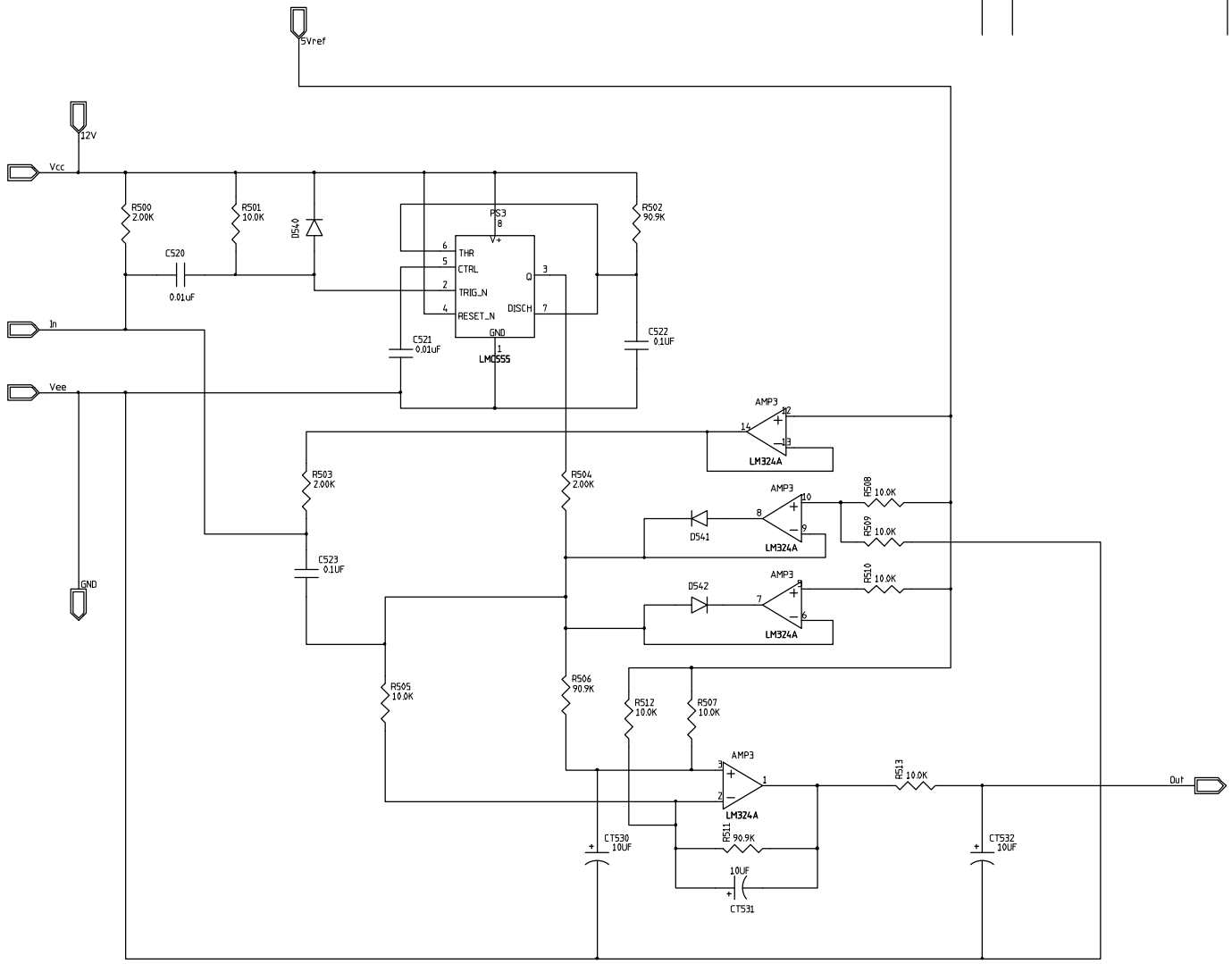

CONTRACT NO.			
APPROVALS	DATE	TachMon	
DRAWN Jinyuan Wu	07/06/99		
CHECKED		SIZE C	FSCM NO. / DWG. NO. SMDTERM03 / REV
ISSUED		SCALE	SHEET 4 (or 5) of 5

REVISIONS			
REV	DESCRIPTION	DATE	APPROVED

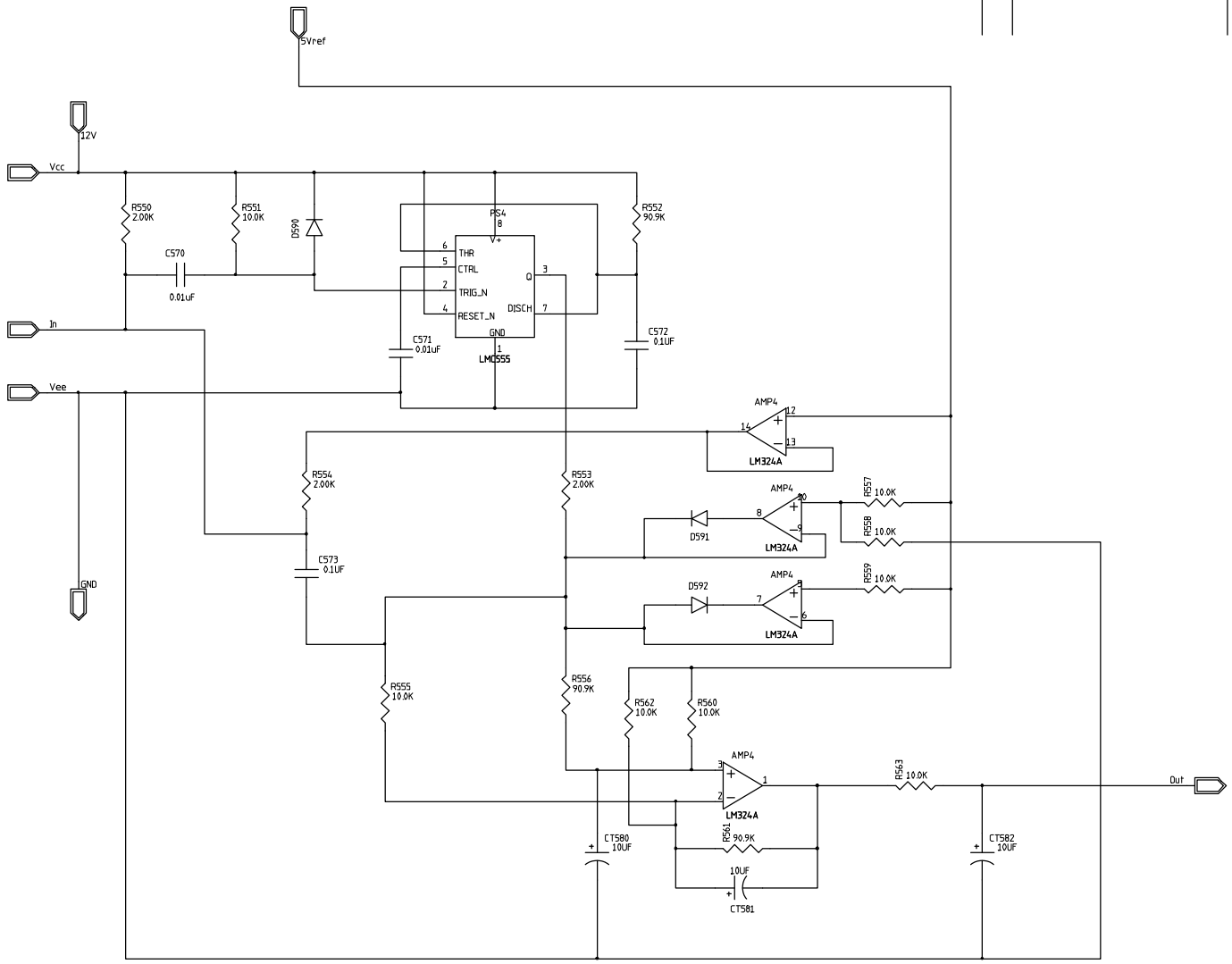

CONTRACT NO.			
APPROVALS	DATE	TachMon	
DRAWN Jinyuan Wu	07/06/99		
CHECKED		SIZE C / FSCM NO. / DWG. NO. SMDTERM03	REV
ISSUED		SCALE	SHEET 4 (or 5) of 5