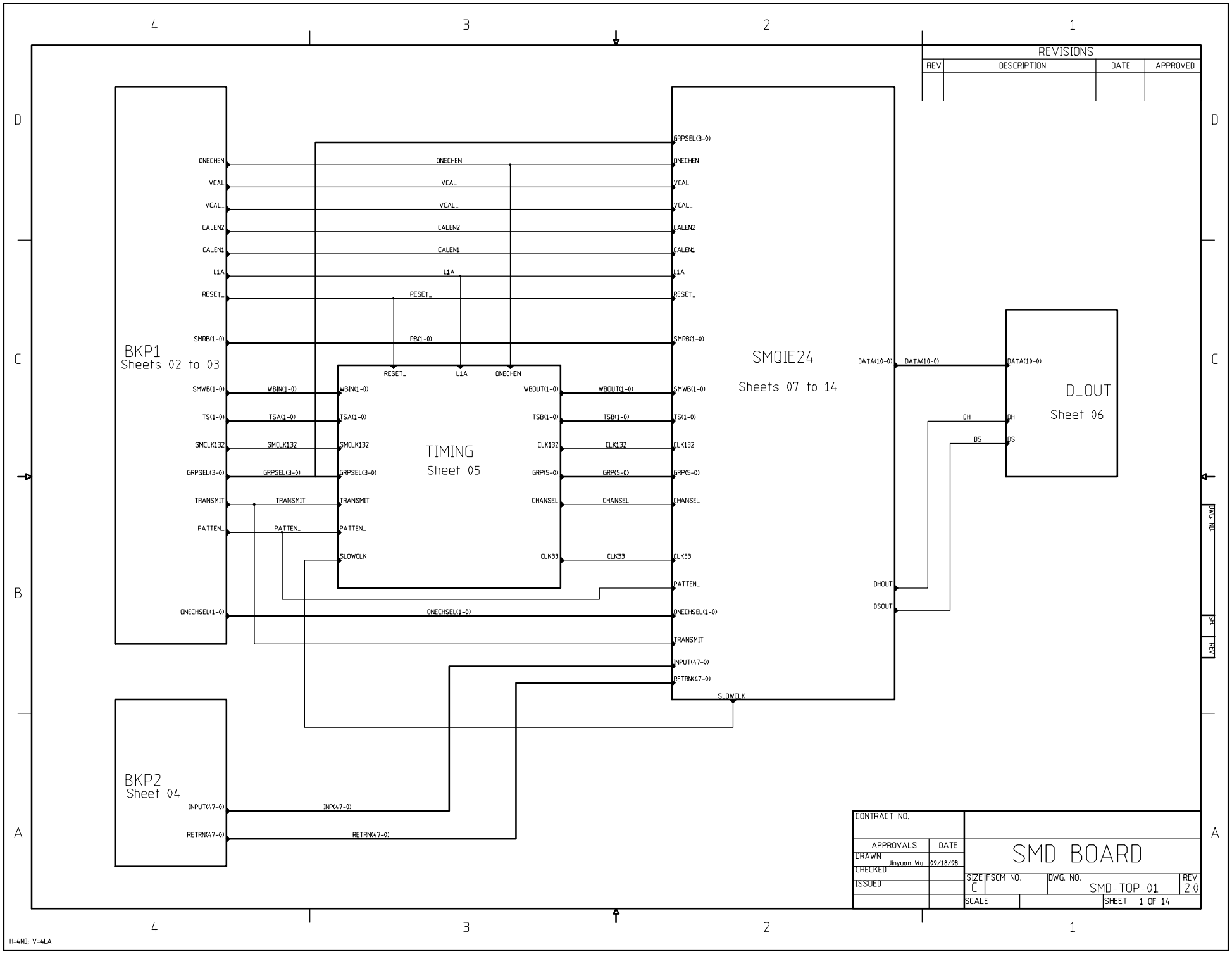
REVISIONS
REV
DESCRIPTION
DATE
APPROVED
BKP1
Sheets 02 to 03
ONECHEN
VCAL
VCAL_
CALEN2
CALEN1
L1A
RESET_
SMRB(1-0)
SMWB(1-0)
TS(1-0)
SMCLK132
GRPSEL(3-0)
TRANSMIT
PATTEN_
ONECHSEL(1-0)
WBIN(1-0)
TSA(1-0)
SMCLK132
GRPSEL(3-0)
TRANSMIT
PATTEN_
RB(1-0)
TIMING
Sheet 05
RESET_
L1A
ONECHEN
WBIN(1-0)
TSA(1-0)
SMCLK132
GRPSEL(3-0)
TRANSMIT
PATTEN_
SLOWCLK
WBOUT(1-0)
TSB(1-0)
CLK132
GRP(5-0)
CHANSEL
CLK33
WBOUT(1-0)
TSB(1-0)
CLK132
GRP(5-0)
CHANSEL
CLK33
SMQIE24
Sheets 07 to 14
GRPSEL(3-0)
ONECHEN
VCAL
VCAL_
CALEN2
CALEN1
L1A
RESET_
SMRB(1-0)
SMWB(1-0)
TS(1-0)
CLK132
GRP(5-0)
CHANSEL
CLK33
PATTEN_
ONECHSEL(1-0)
TRANSMIT
INPUT(47-0)
RETRN(47-0)
SLOWCLK
DATA(10-0)
DHOUT
DSOUT
D_OUT
Sheet 06
DATA(10-0)
DH
DS
BKP2
Sheet 04
INPUT(47-0)
RETRN(47-0)
INP(47-0)
RETRN(47-0)
CONTRACT NO.
APPROVALS
DATE
DRAWN
Jinyuan Wu
09/18/98
CHECKED
ISSUED
SMD BOARD
SIZE
C
FSCM NO.
DWG. NO.
SMD-TOP-01
REV
2.0
SCALE
SHEET 1 OF 14
DWG NO.
SH.
REV
H=4ND; V=4LA

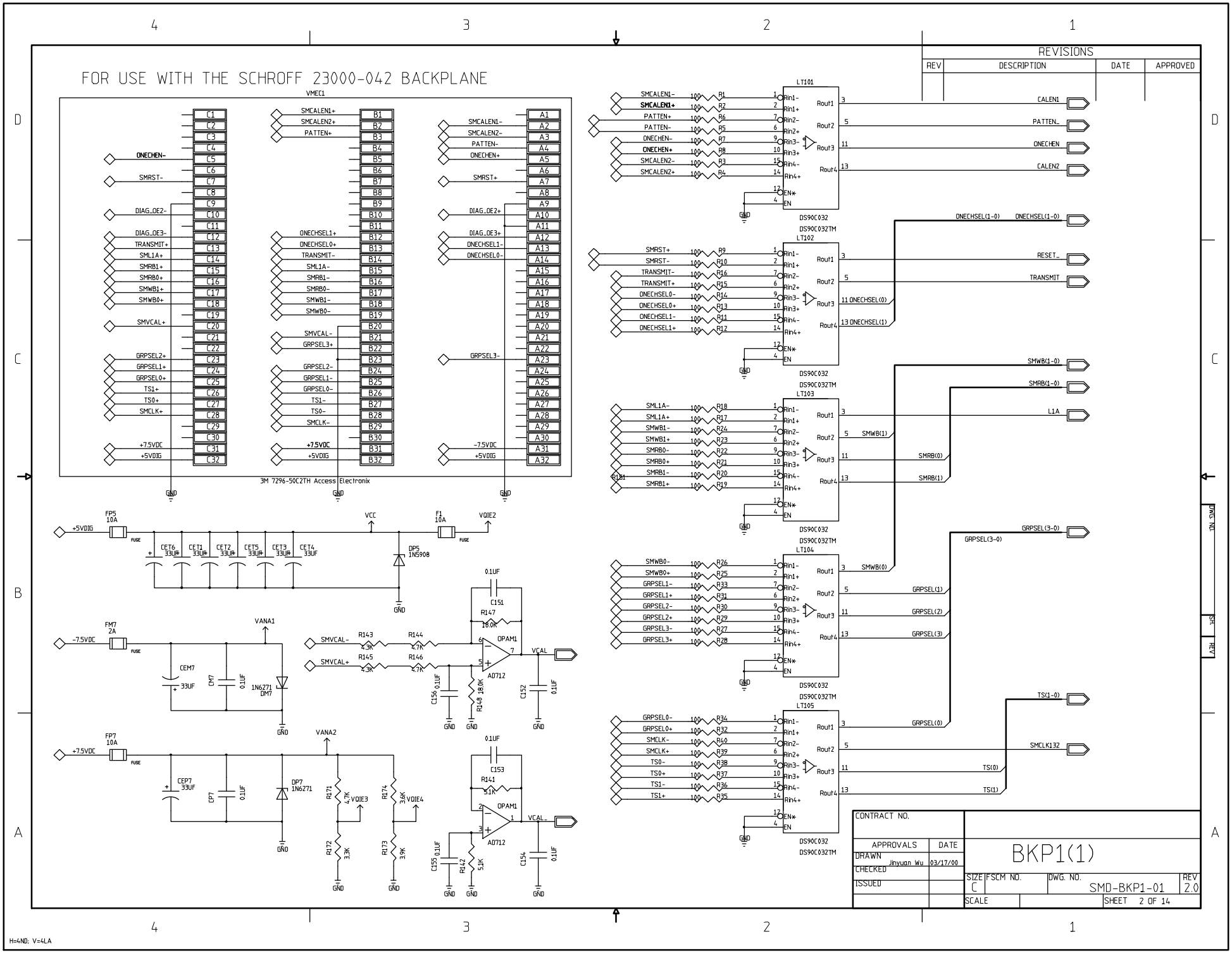
FOR USE WITH THE SCHROFF 23000-042 BACKPLANE
VMEC1
3M 7296-50C2TH Access Electronix
LT101
LT102
LT103
LT104
LT105
DS90C032
DS90C032TM
REVISIONS
REV
DESCRIPTION
DATE
APPROVED
CONTRACT NO.
APPROVALS
DATE
DRAWN
Jinyuan Wu
03/17/00
CHECKED
ISSUED
BKP1(1)
SIZE
C
FSCM NO.
DWG. NO.
SMD-BKP1-01
REV
2.0
SCALE
SHEET 2 OF 14
H=4ND; V=4LA

REVISIONS			
REV	DESCRIPTION	DATE	APPROVED

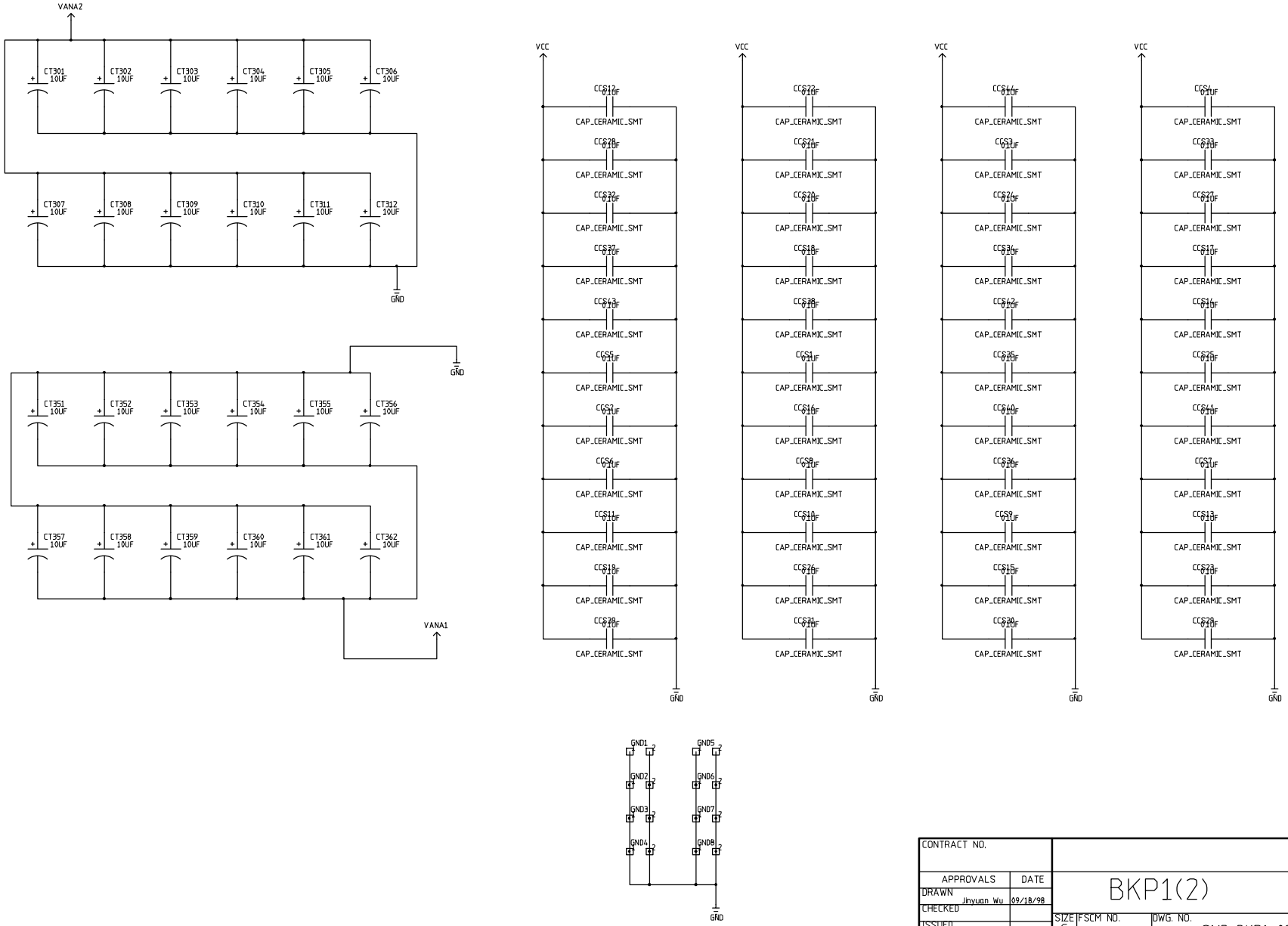

CONTRACT NO.			
APPROVALS	DATE	BKP1(2)	
DRAWN Jhyuan Wu	09/18/98		
CHECKED		SIZE C	FSCM NO. / DWG. NO. SMD-BKP1-02 / REV 2.0
ISSUED		SCALE	SHEET 3 OF 14

H=4ND; V=4LA

REVISIONS			
REV	DESCRIPTION	DATE	APPROVED

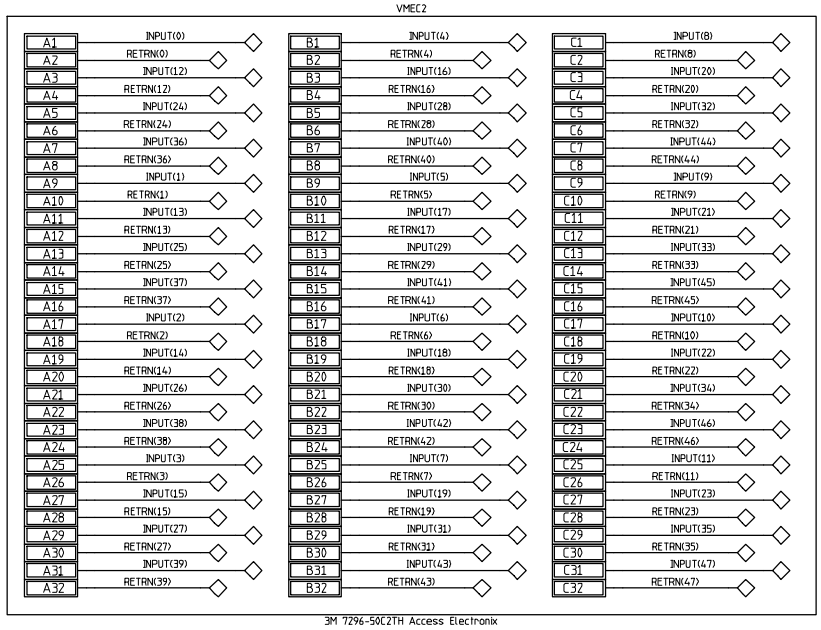

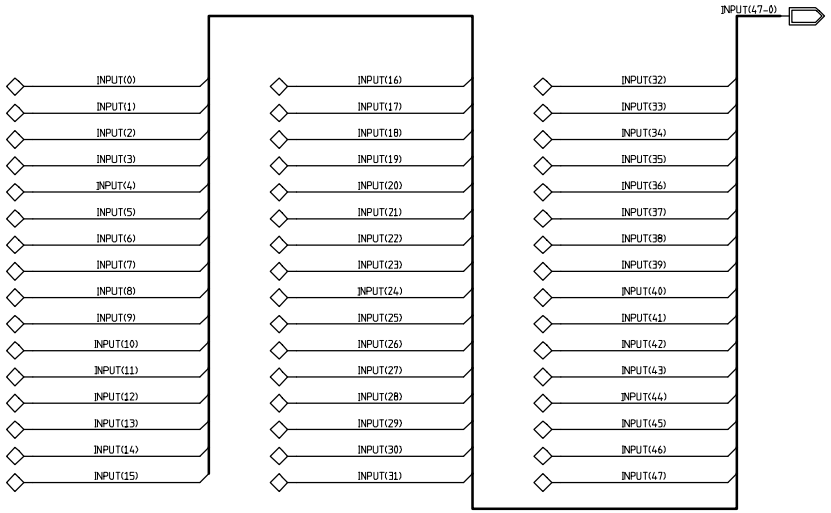

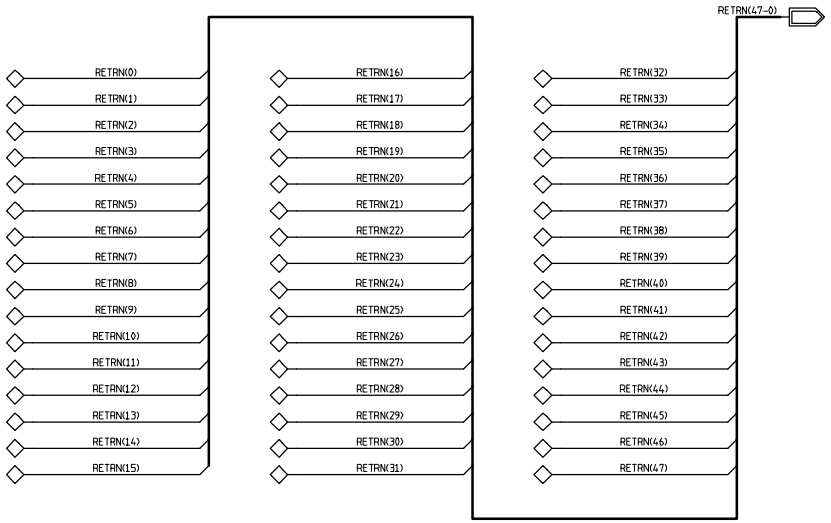

CONTRACT NO.			
APPROVALS	DATE	BKP2	
DRAWN Jinyuan Wu	09/18/98		
CHECKED		SIZE C / FSCM NO. / DWG. NO. SMD-BKP2-01	REV 2.0
ISSUED		SCALE	SHEET 4 OF 14

DWG. NO. SHT REV

H=4ND; V=4LA

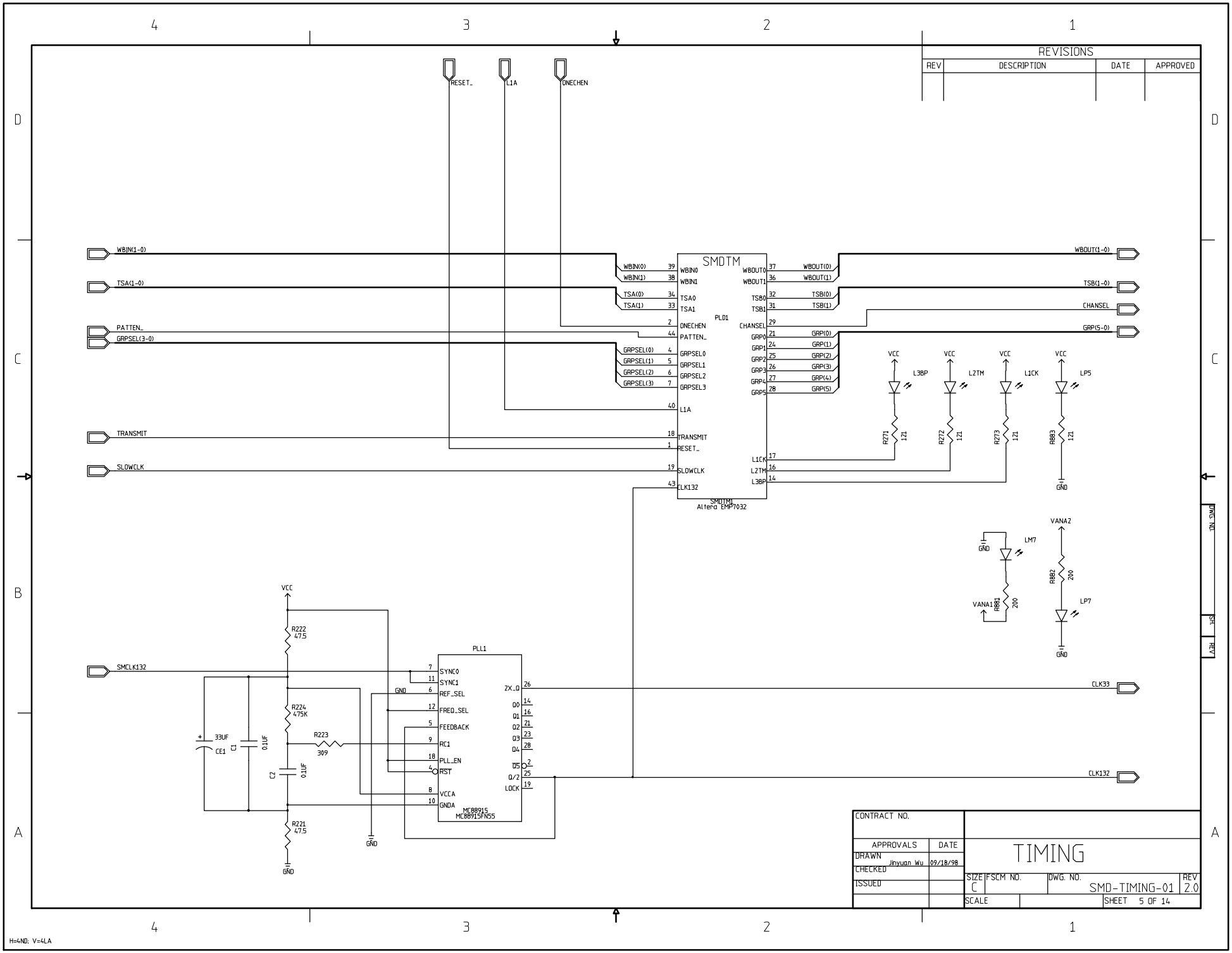
REVISIONS
REV
DESCRIPTION
DATE
APPROVED
RESET_
L1A
ONECHEN
WBIN(1-0)
TSA(1-0)
PATTEN_
GRPSEL(3-0)
TRANSMIT
SLOWCLK
SMCLK132
SMDTM
PLD1
WBIN0
WBIN1
TSA0
TSA1
ONECHEN
PATTEN_
GRPSEL0
GRPSEL1
GRPSEL2
GRPSEL3
L1A
TRANSMIT
RESET_
SLOWCLK
CLK132
WBOUT0
WBOUT1
TSB0
TSB1
CHANSEL
GRP0
GRP1
GRP2
GRP3
GRP4
GRP5
L1CK
L2TM
L3BP
SMDTM1
Altera EMP7032
WBOUT(1-0)
TSB(1-0)
CHANSEL
GRP(5-0)
VCC
L3BP
L2TM
L1CK
LP5
R271
R272
R273
R883
121
GND
VANA2
LM7
R882
200
VANA1
R881
LP7
PLL1
SYNC0
SYNC1
REF_SEL
FREQ_SEL
FEEDBACK
RC1
PLL_EN
RST
VCCA
GNDA
2X_Q
Q0
Q1
Q2
Q3
Q4
Q5
Q/2
LOCK
MC88915
MC88915FN55
CLK33
CLK132
R222
47.5
R224
475K
R223
309
R221
47.5
33UF
CE1
C1
0.1UF
C2
0.1UF
CONTRACT NO.
APPROVALS
DATE
DRAWN
Jinyuan Wu
09/18/98
CHECKED
ISSUED
TIMING
SIZE
C
FSCM NO.
DWG. NO.
SMD-TIMING-01
REV
2.0
SCALE
SHEET 5 OF 14
DWG NO.
SHT
REV
H=4ND; V=4LA

REVISIONS			
REV	DESCRIPTION	DATE	APPROVED

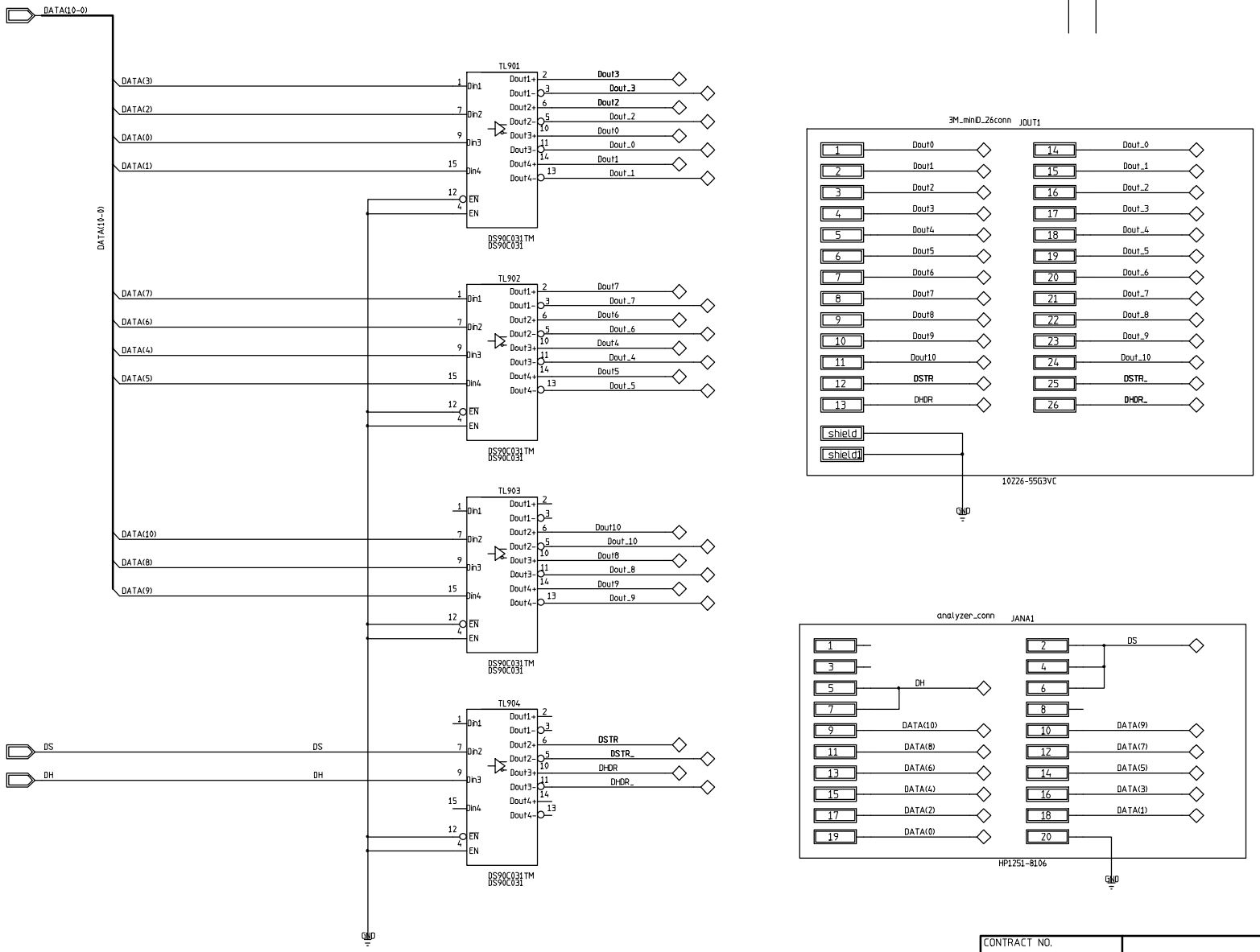

CONTRACT NO.		
APPROVALS	DATE	
DRAWN Jinyuan Wu	09/18/98	D_OUT
CHECKED		
ISSUED		

SIZE	FSCM NO.	DWG. NO.	REV
C		SMD-D_OUT-01	2.0
SCALE		SHEET 6 OF 14	

H=4ND; V=4LA

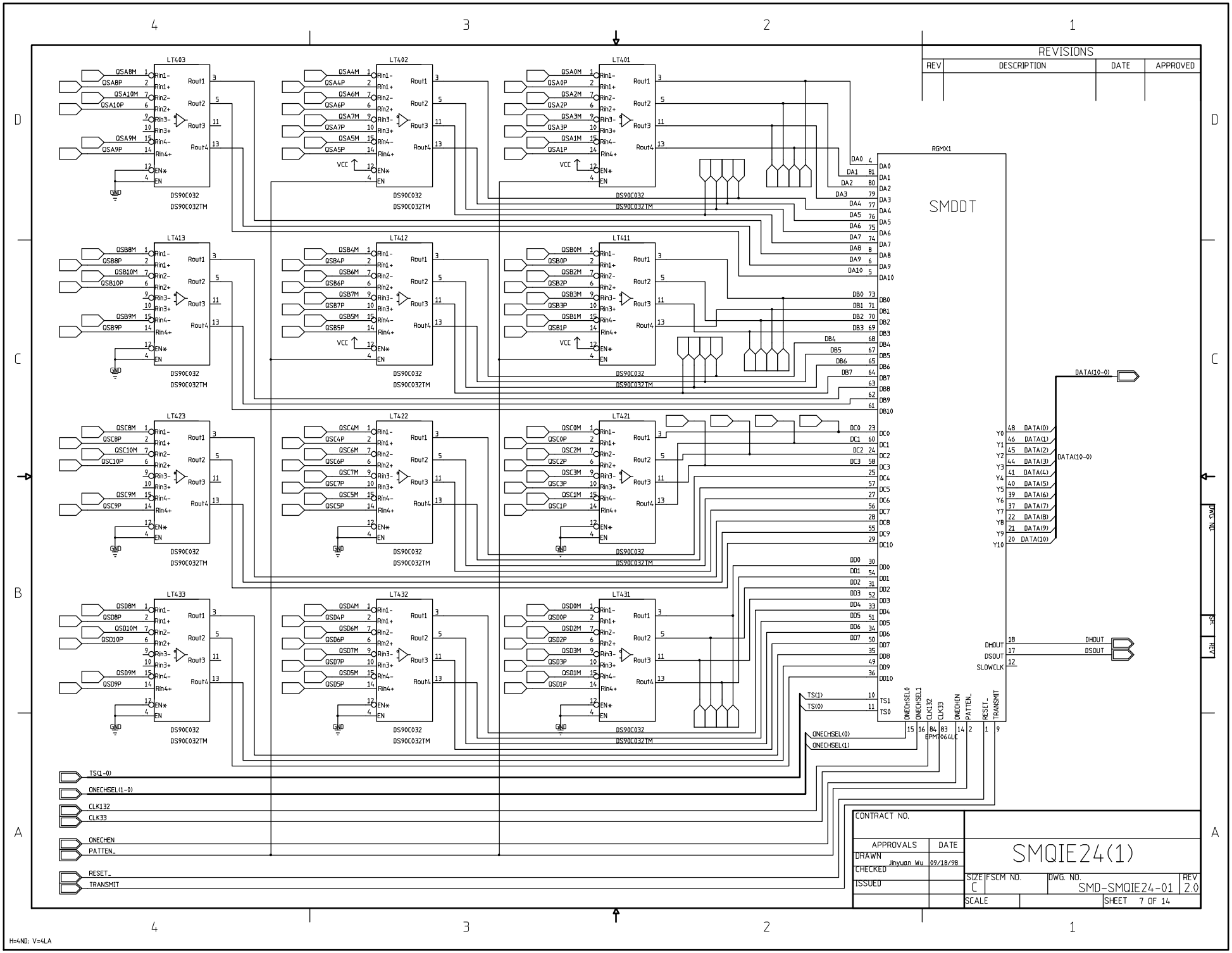
REVISIONS
REV
DESCRIPTION
DATE
APPROVED
LT403
LT402
LT401
LT413
LT412
LT411
LT423
LT422
LT421
LT433
LT432
LT431
DS90C032
DS90C032TM
RGMX1
SMDDT
BPM7064LC
DATA(10-0)
DHOUT
DSOUT
SLOWCLK
TS(1-0)
ONECHSEL(1-0)
CLK132
CLK33
ONECHEN
PATTEN_
RESET_
TRANSMIT
CONTRACT NO.
APPROVALS
DATE
DRAWN
Jinyuan Wu
09/18/98
CHECKED
ISSUED
SMQIE24(1)
SIZE
C
FSCM NO.
DWG. NO.
SMD-SMQIE24-01
REV
2.0
SCALE
SHEET 7 OF 14
DWG NO
SH
REV
H=4ND; V=4LA

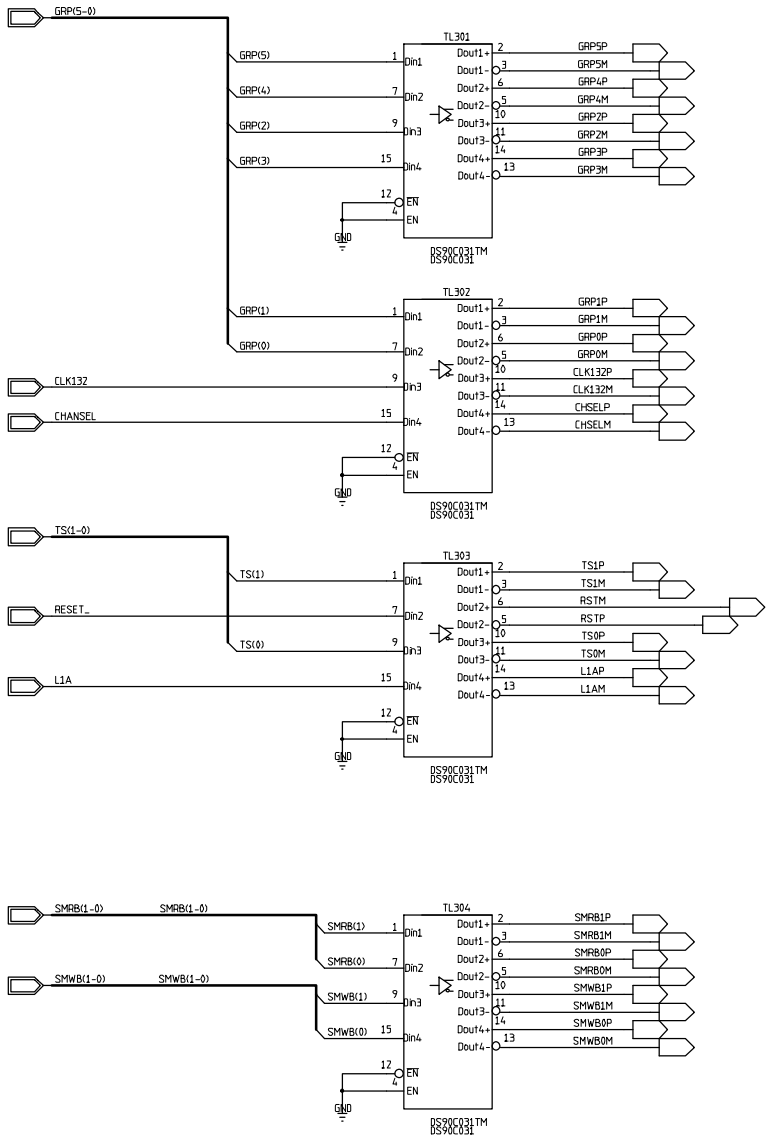

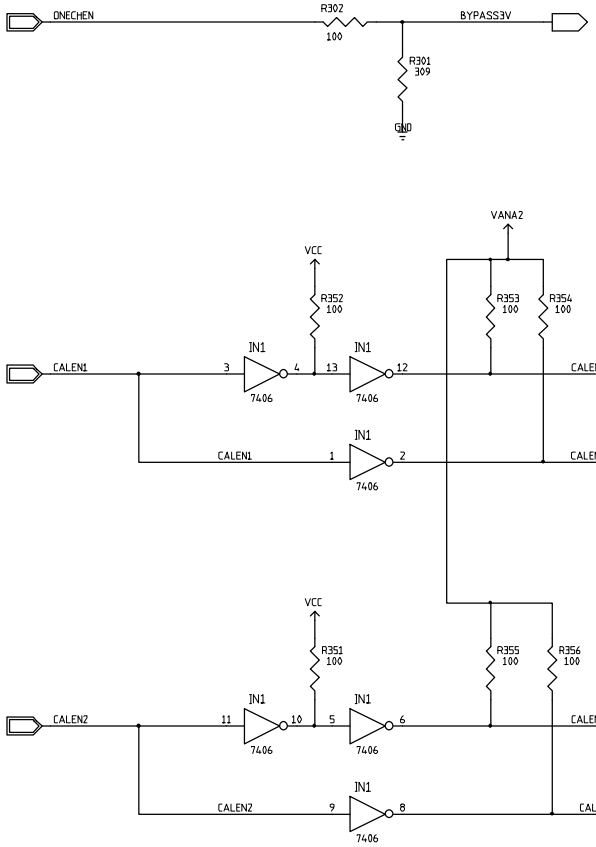

REVISIONS			
REV	DESCRIPTION	DATE	APPROVED

CONTRACT NO.		
APPROVALS	DATE	
DRAWN Jhyuan Wu	09/18/98	SMQIE24(2)
CHECKED		
ISSUED		

SIZE	FSCM NO.	DWG. NO.	REV
C		SMD-SMQIE24-02	2.0
SCALE		SHEET 8 OF 14	

H=4ND; V=4LA

REVISIONS			
REV	DESCRIPTION	DATE	APPROVED

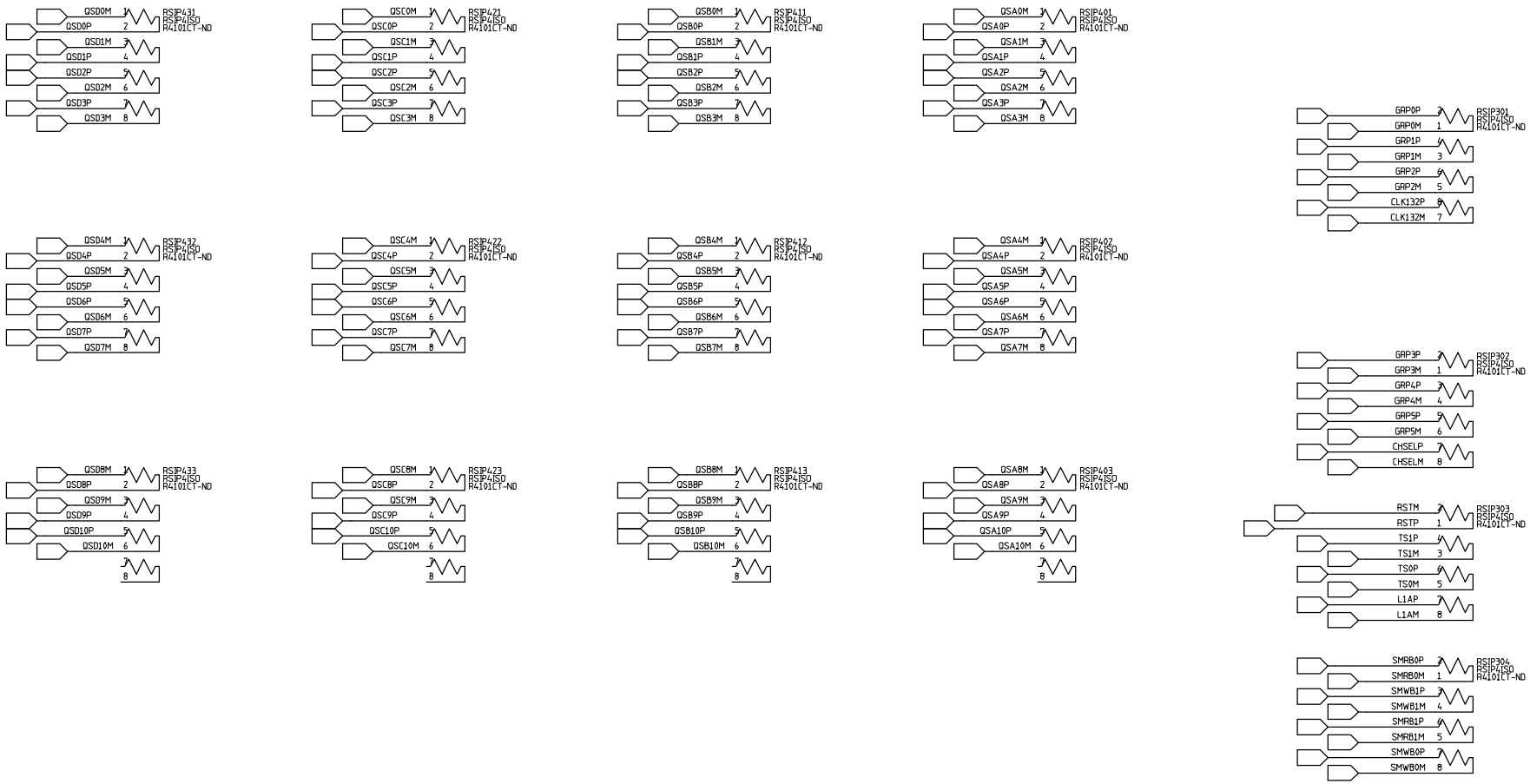

CONTRACT NO.		
APPROVALS	DATE	
DRAWN Jhyuan Wu	09/18/98	SMQIE24(3)
CHECKED		SIZE C · FSCM NO. · DWG. NO. SMD-SMQIE24-03 · REV 2.0
ISSUED		SCALE · SHEET 9 OF 14

H=4ND; V=4LA

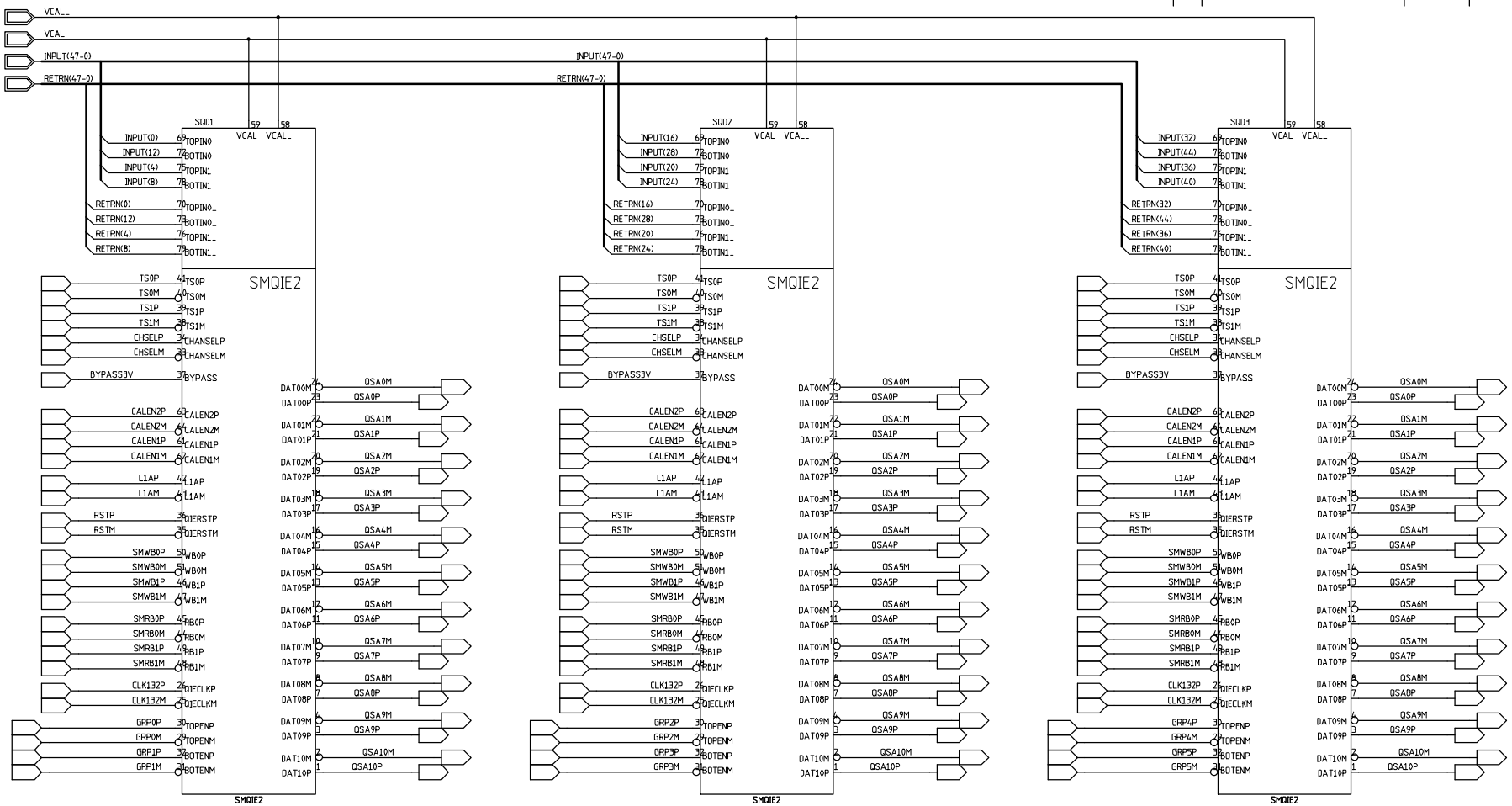

REVISIONS			
REV	DESCRIPTION	DATE	APPROVED

CONTRACT NO.		
APPROVALS	DATE	SMQIE24(4)
DRAWN Jinyuan Wu	09/18/98	
CHECKED		
ISSUED		SIZE C · FSCM NO. · DWG. NO. SMD-SMQIE24-04 · REV 2.0
		SCALE · SHEET 10 OF 14

DWG. NO. · SH. · REV

H=4ND; V=4LA

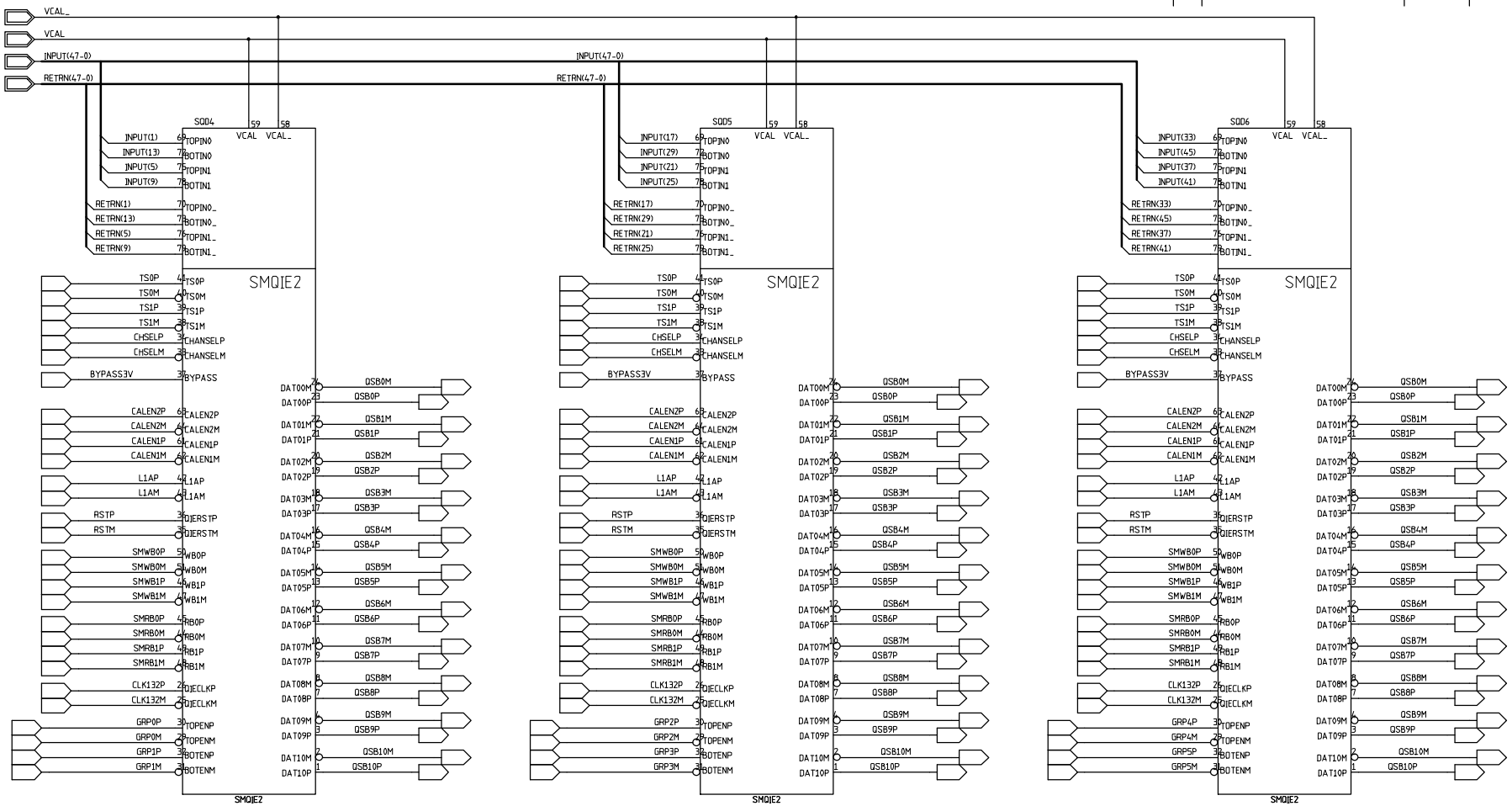

REVISIONS			
REV	DESCRIPTION	DATE	APPROVED

CONTRACT NO.		
APPROVALS	DATE	SMQIE24(5)
DRAWN Jinyuan Wu	09/18/98	
CHECKED		
ISSUED		SIZE C · FSCM NO. · DWG. NO. SMD-SMQIE24-05 · REV 2.0
		SCALE · SHEET 11 OF 14

DWG. NO. · SH. · REV

H=4ND; V=4LA

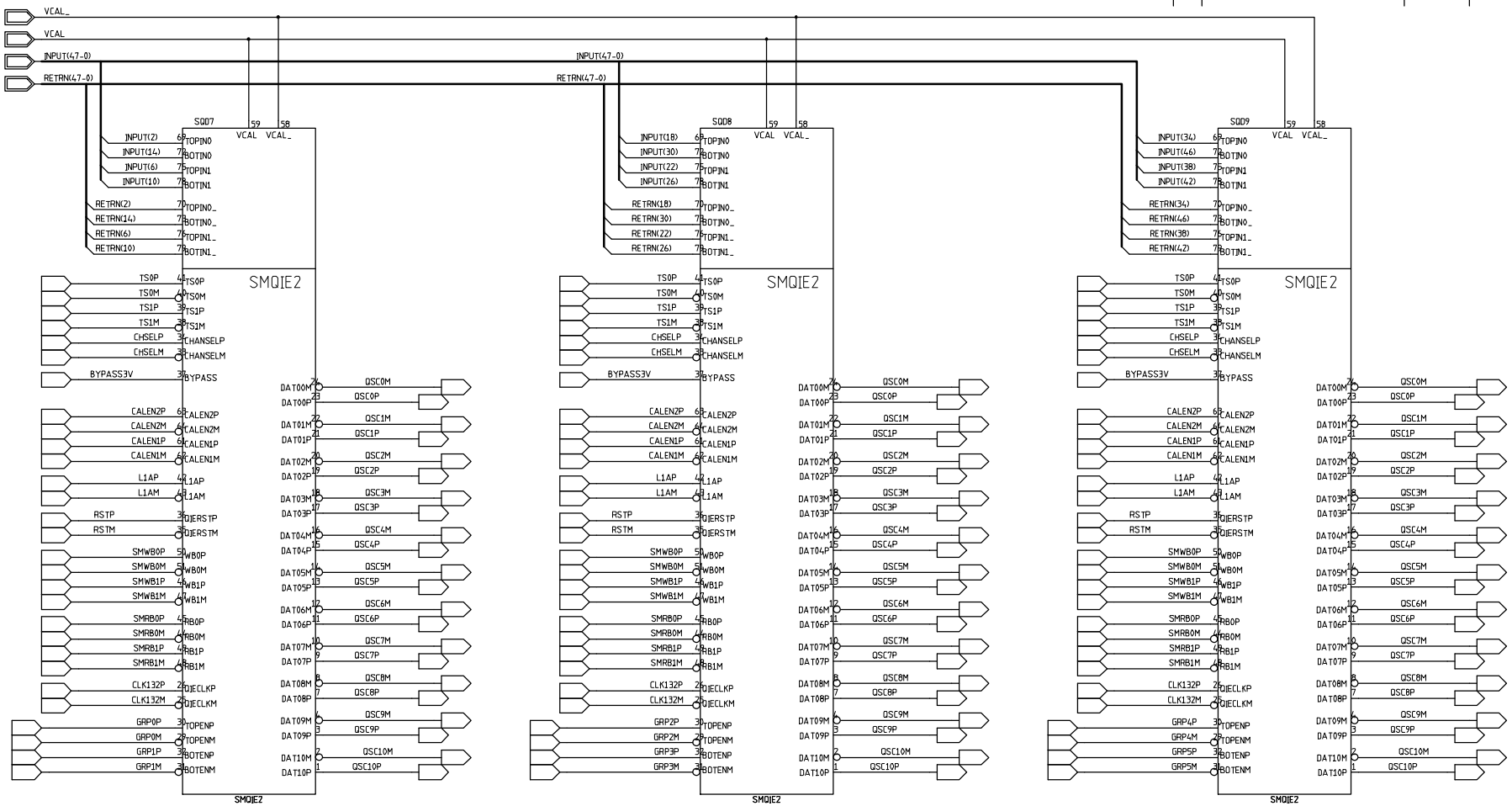

REVISIONS			
REV	DESCRIPTION	DATE	APPROVED

CONTRACT NO.		
APPROVALS	DATE	SMQIE24(6)
DRAWN Jinyuan Wu	09/18/98	
CHECKED		
ISSUED		

SIZE	FSCM NO.	DWG. NO.	REV
C		SMD-SMQIE24-06	2.0
SCALE		SHEET 12 OF 14	

DWG. NO.

SH.

REV

H=4ND; V=4LA

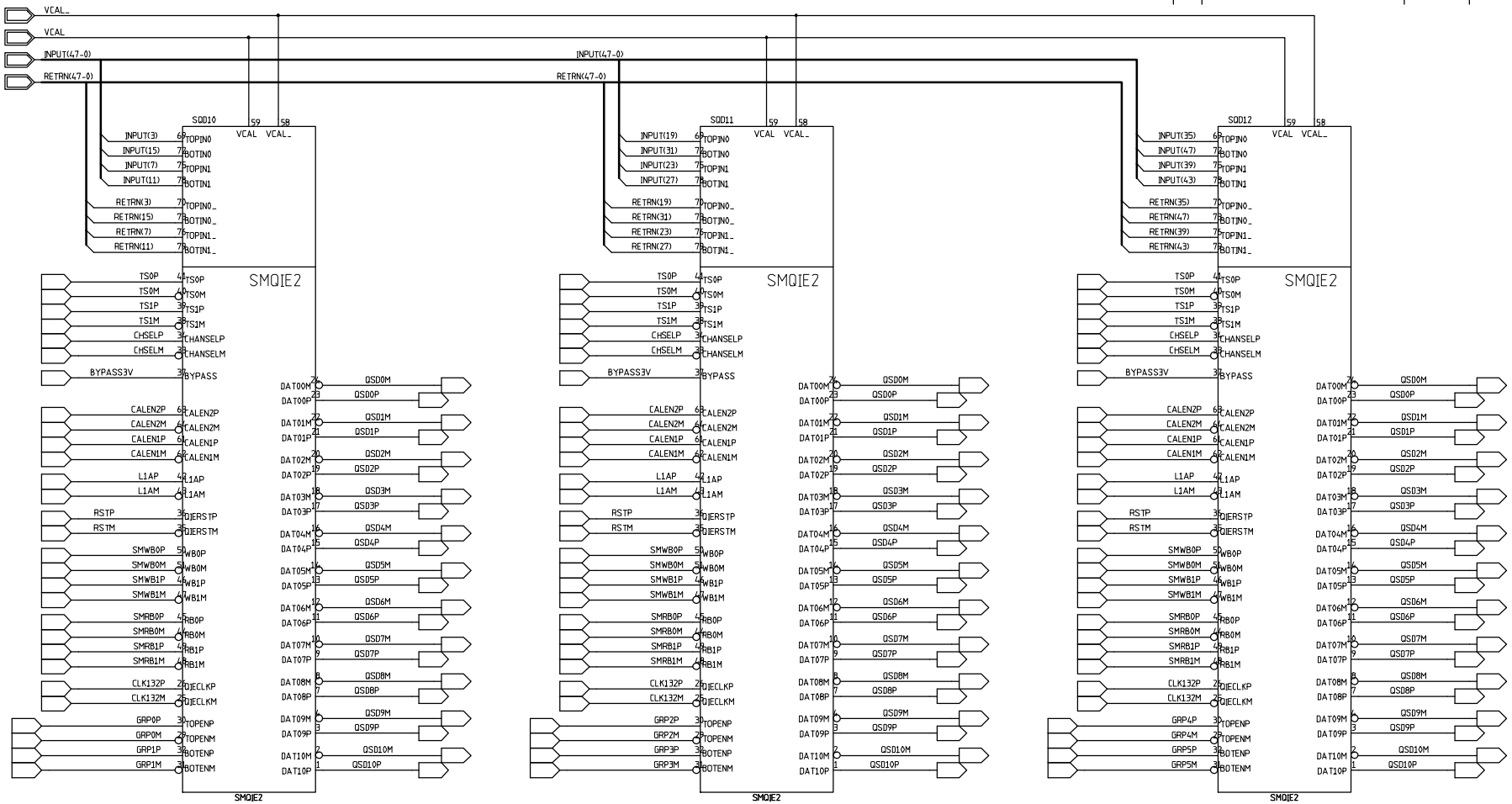

REVISIONS			
REV	DESCRIPTION	DATE	APPROVED

CONTRACT NO.		
APPROVALS	DATE	SMQIE24(7)
DRAWN Jinyuan Wu	09/18/98	
CHECKED		SIZE C · FSCM NO. · DWG. NO. SMD-SMQIE24-07 · REV 2.0
ISSUED		SCALE · SHEET 13 OF 14

DWG. NO. · SH. · REV

H=4ND; V=4LA

REVISIONS			
REV	DESCRIPTION	DATE	APPROVED

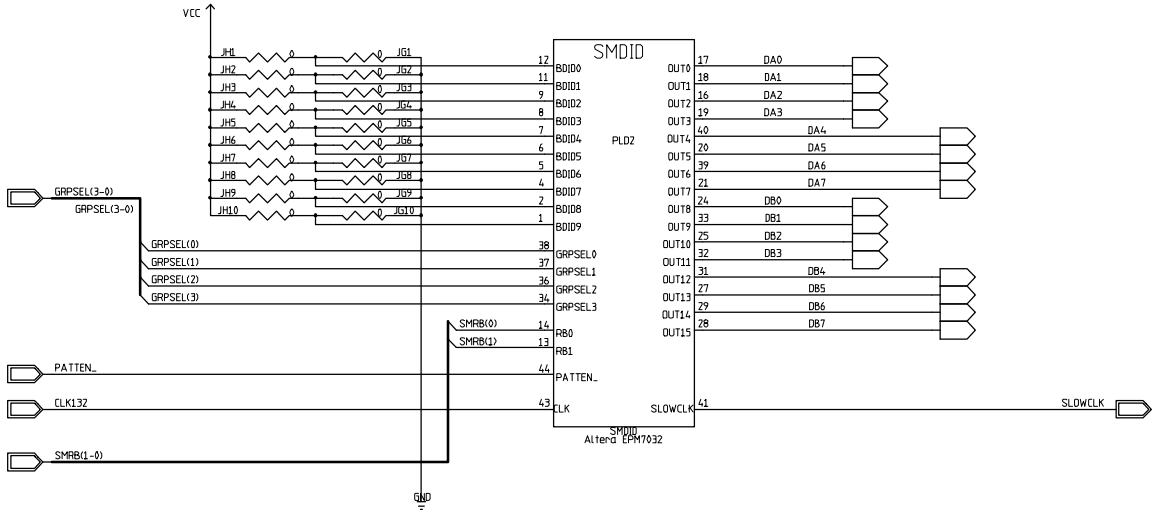

CONTRACT NO.			
APPROVALS	DATE	SMQIE24(8)	
DRAWN Jhyuan Wu	09/18/98		
CHECKED		SIZE C	FSCM NO.
ISSUED		DWG. NO. SMD-SMQIE24-08	REV 2.0
		SCALE	SHEET 14 OF 14

DWG. NO.
SH.
REV.

H=4ND; V=4LA