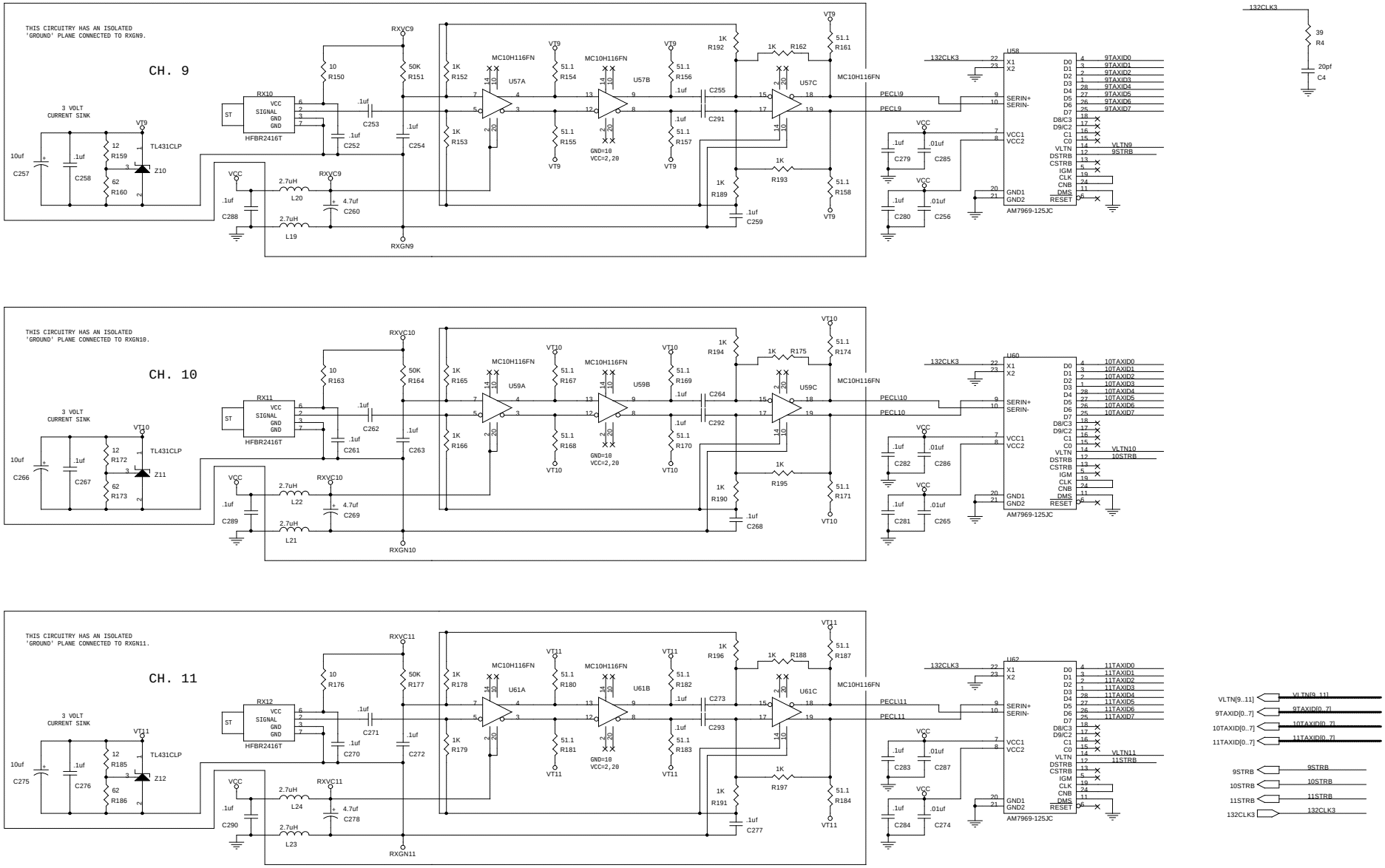

FIBER8X3.sch

ARGONNE NATIONAL LABORATORY

HIGH ENERGY PHYSICS DIVISION

Title: CDF RECES - FIBER RECEIVER CHANNELS 9-11

Size	Document Number	Rev
C	PCB 1307	

Date: Friday, November 30, 2001 Sheet 5 of 13